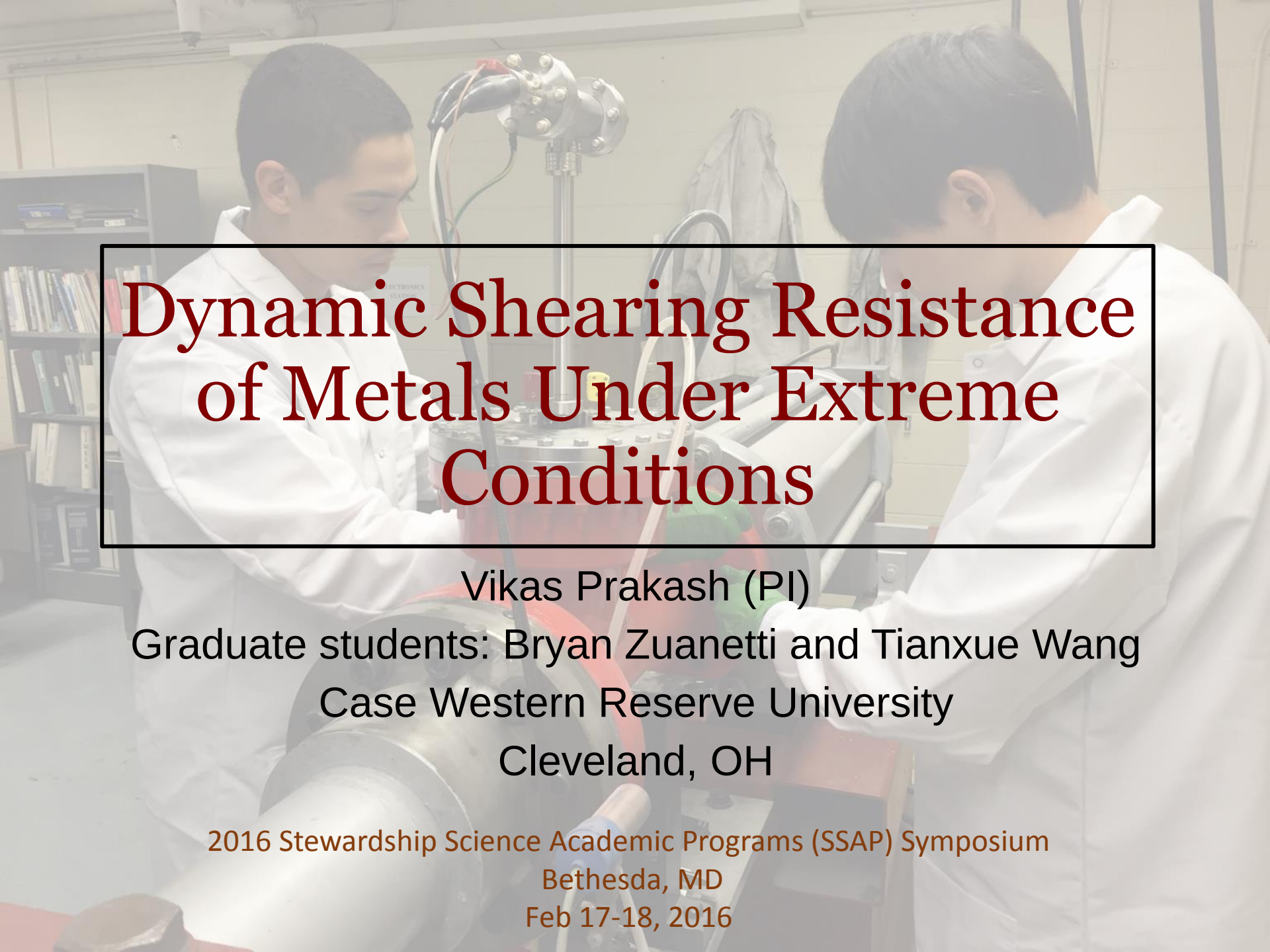

Dynamic Shearing Resistance of Metals Under Extreme Conditions

Vikas Prakash (PI)
Graduate students: Bryan Zuanetti and Tianxue Wang
Case Western Reserve University
Cleveland, OH

2016 Stewardship Science Academic Programs (SSAP) Symposium
Bethesda, MD
Feb 17-18, 2016

Motivation

(Frutschy and Clifton, JMPS 1998)

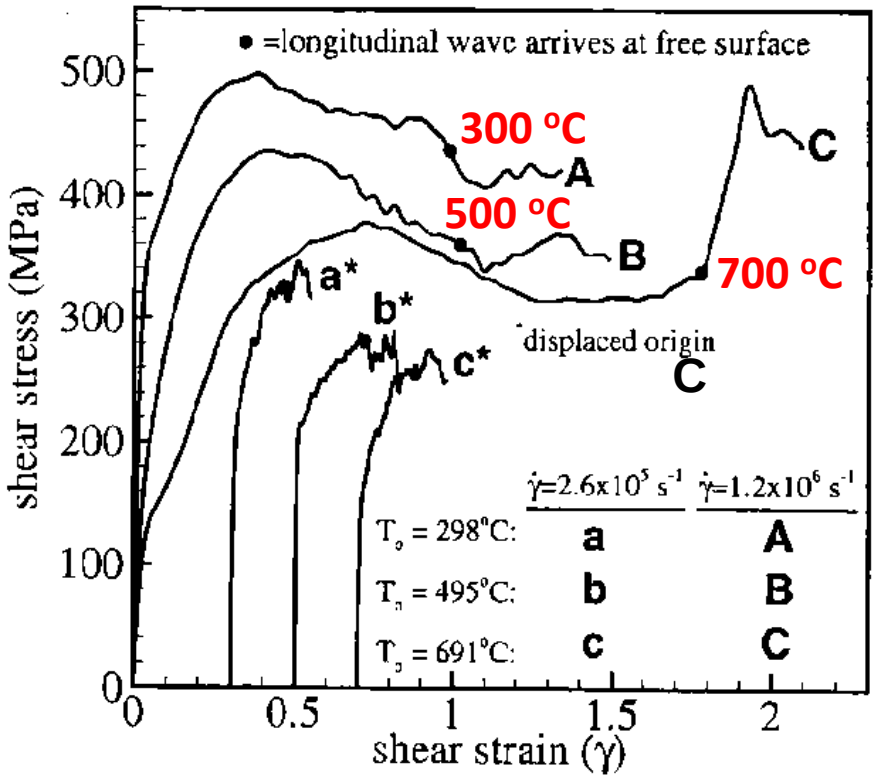

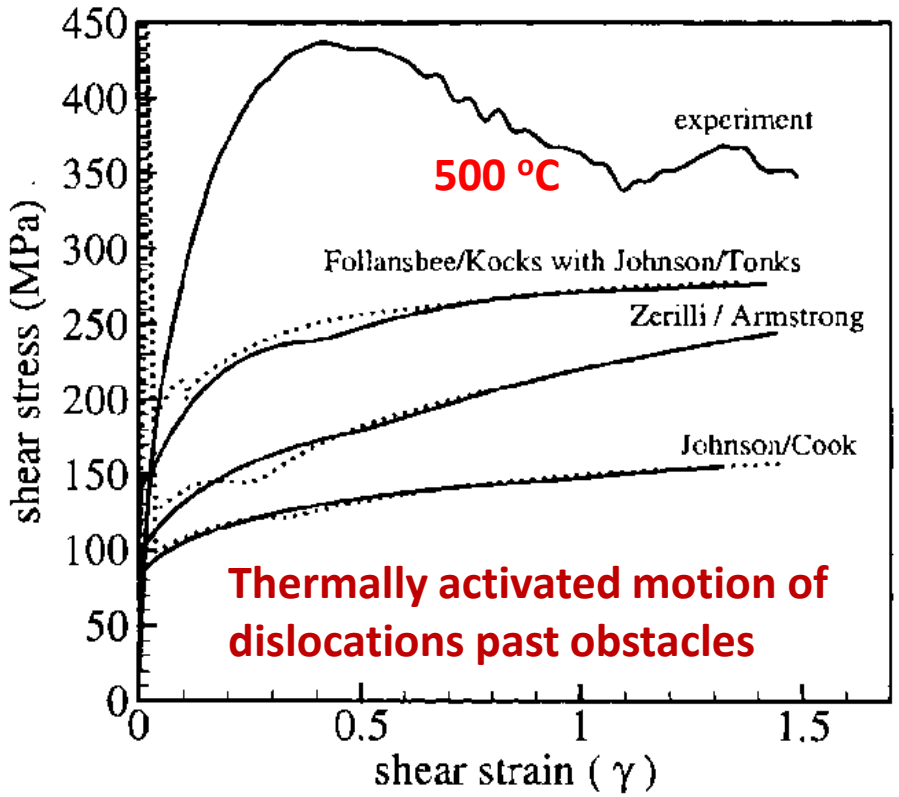

Dynamic shear-stress vs shear strain-data for OFHC copper at strain rates in excess of 10^5/s and at test temperatures ranging from 300°C to 700°C

Motivation (cont.)

Normal Shock Compression Plate-impact Experiments on High-purity Al (Kanel *et al.* 1996)

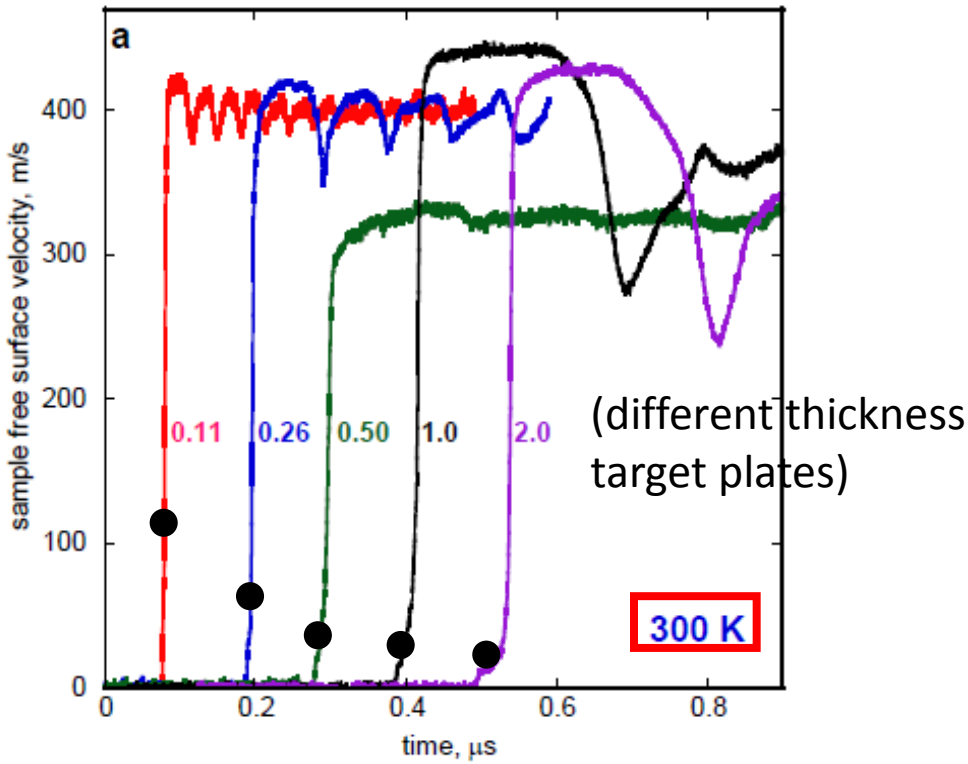

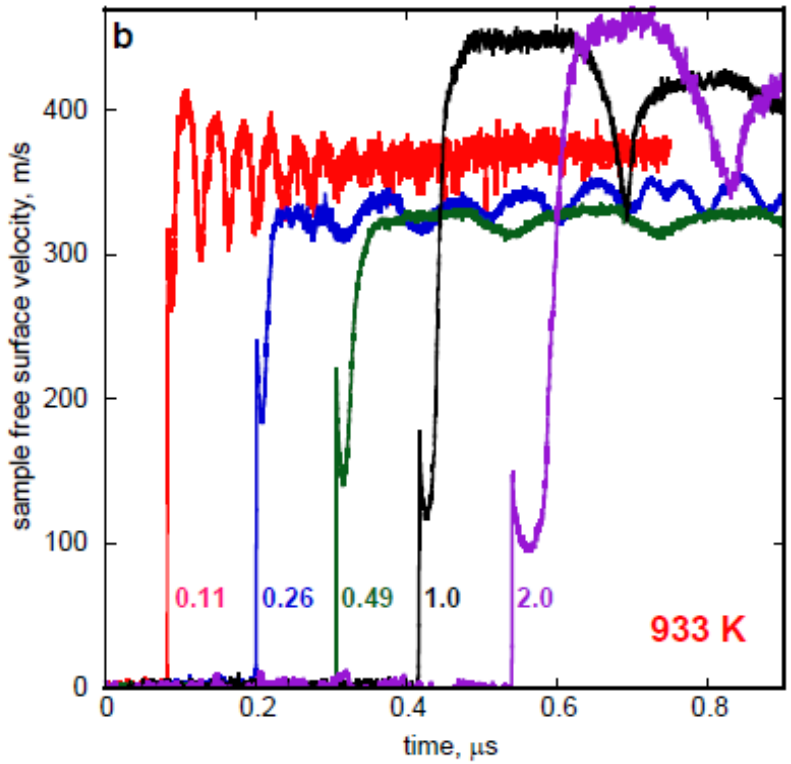

Elastic Precursor- indicator of material strength

Melt point of 99.999% pure Al – 933.4 K

Anomalous growth in material strength under dynamic loading conditions at test temperatures approaching melt

Challenges in Conducting Elevated Temperature Plate Impact Experiments

- Introduce heating element in the impact chamber – resistance/induction coil heating system.
- Modify target holder to allow for remote target manipulation and alignment to account for differential expansion to maintain impact parallelism between target and flyer.
- For oblique impact experiments need to utilize flyer and target plates that will remain elastic over a wide temperature range.
- Need to extend combined NDI and TDI to elevated temperatures. Need grating that can withstand elevated temperatures.

OUR APPROACH: Design experiments such that the flyer plate on the sabot represents the specimen -- heat the flyer and not the target plate.

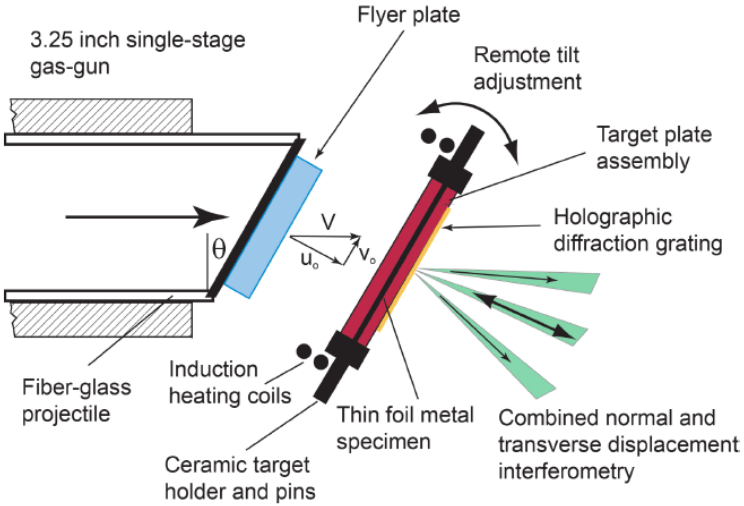

Investigate Dynamic Strength at Incipient Plastic flow in Metals at Elevated Temperatures

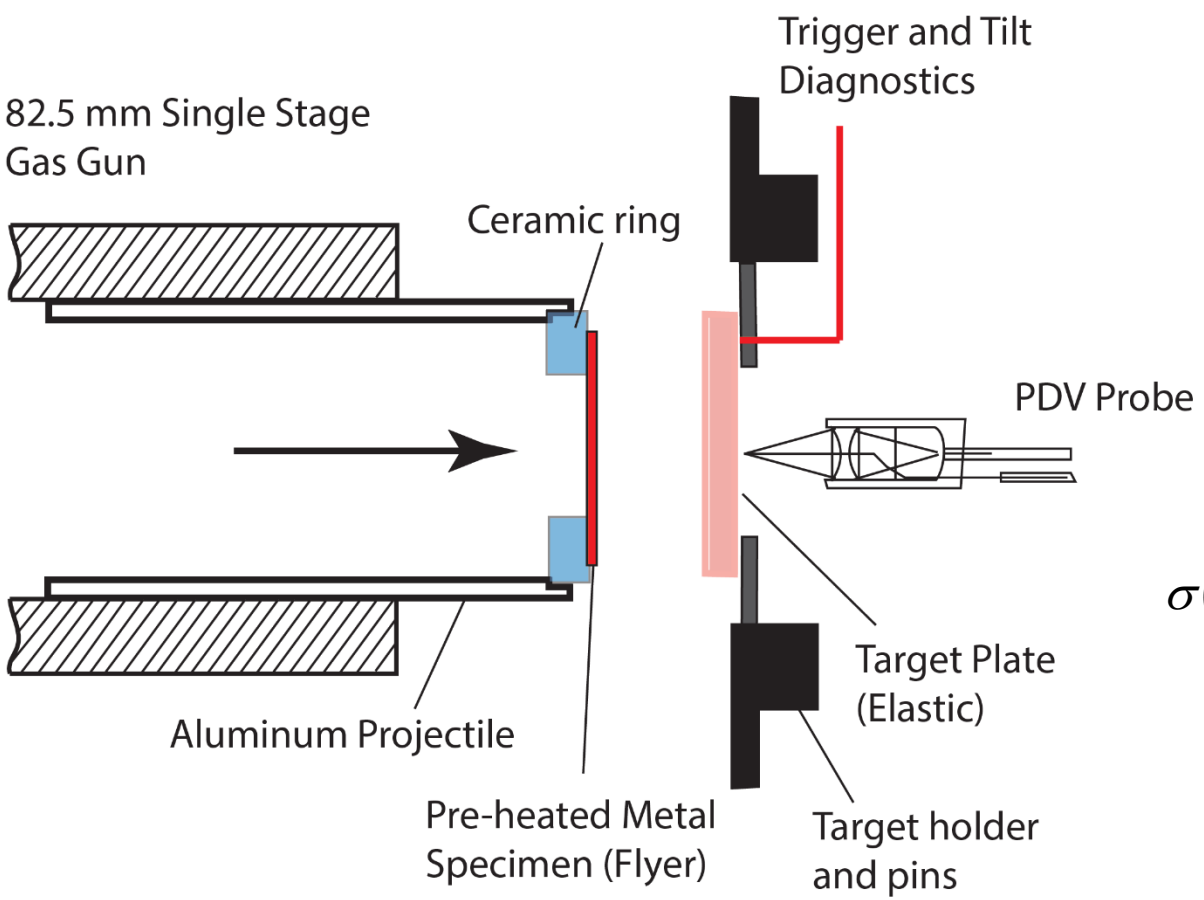

$$\sigma(t) = \frac{(\rho c_1)_{tar}}{2} u_{fs}(t)$$

Dynamic Shearing Resistance of Metals Near their Melt temperatures using Pressure-shear Configuration

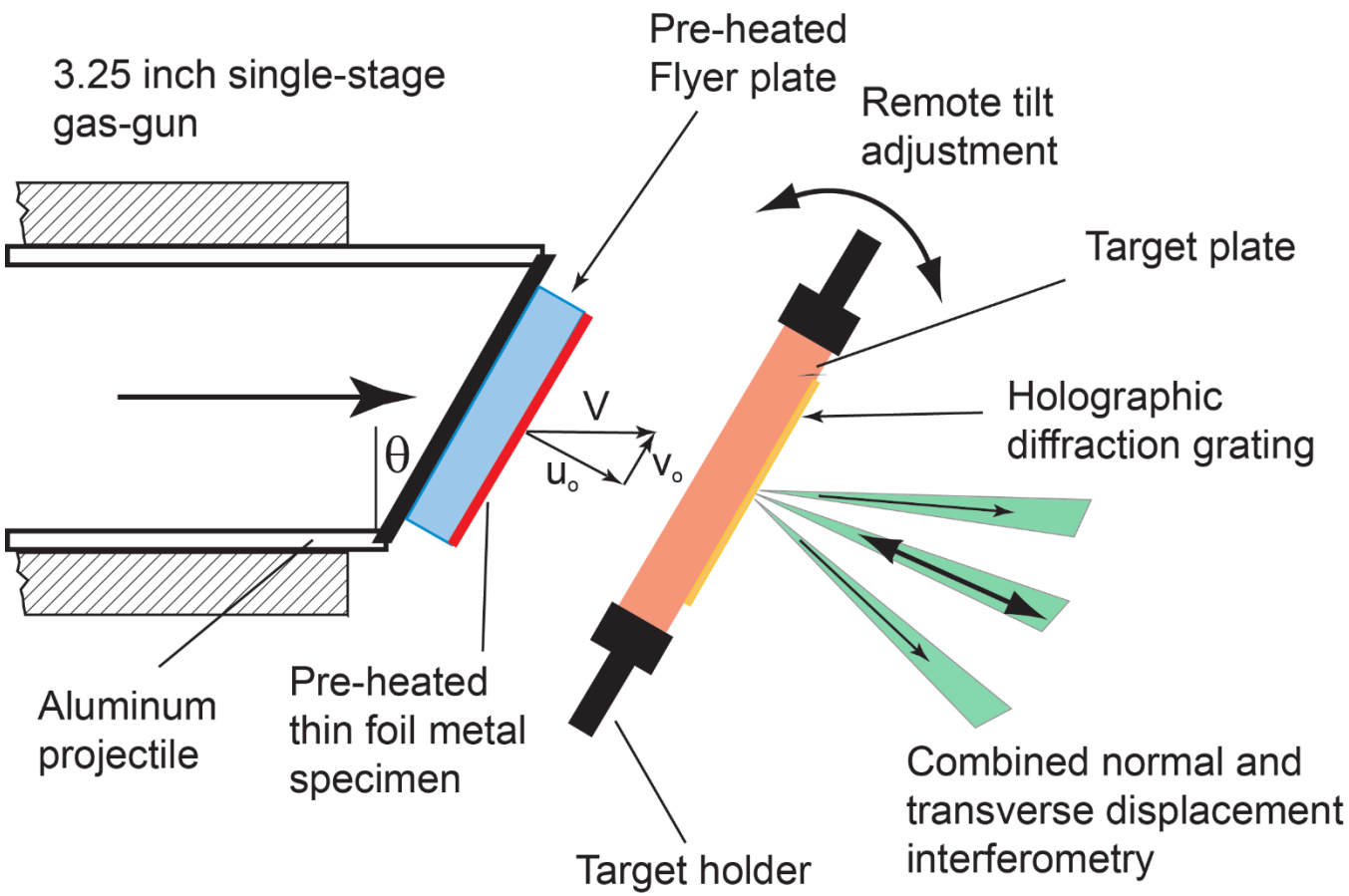

$$\sigma(t) = \frac{(\rho c_1)_{tar}}{2} u_{fs}(t)$$

$$\tau(t) = \frac{(\rho c_2)_{tar}}{2} v_{fs}(t)$$

$$\dot{\gamma}_1^p = \frac{\left(V \sin\theta - v_{fs}(t)\right)}{h}$$

$$\gamma^p = \int_0^t \dot{\gamma}_1^p(t)\, dt.$$

Modifications to the Gas Gun

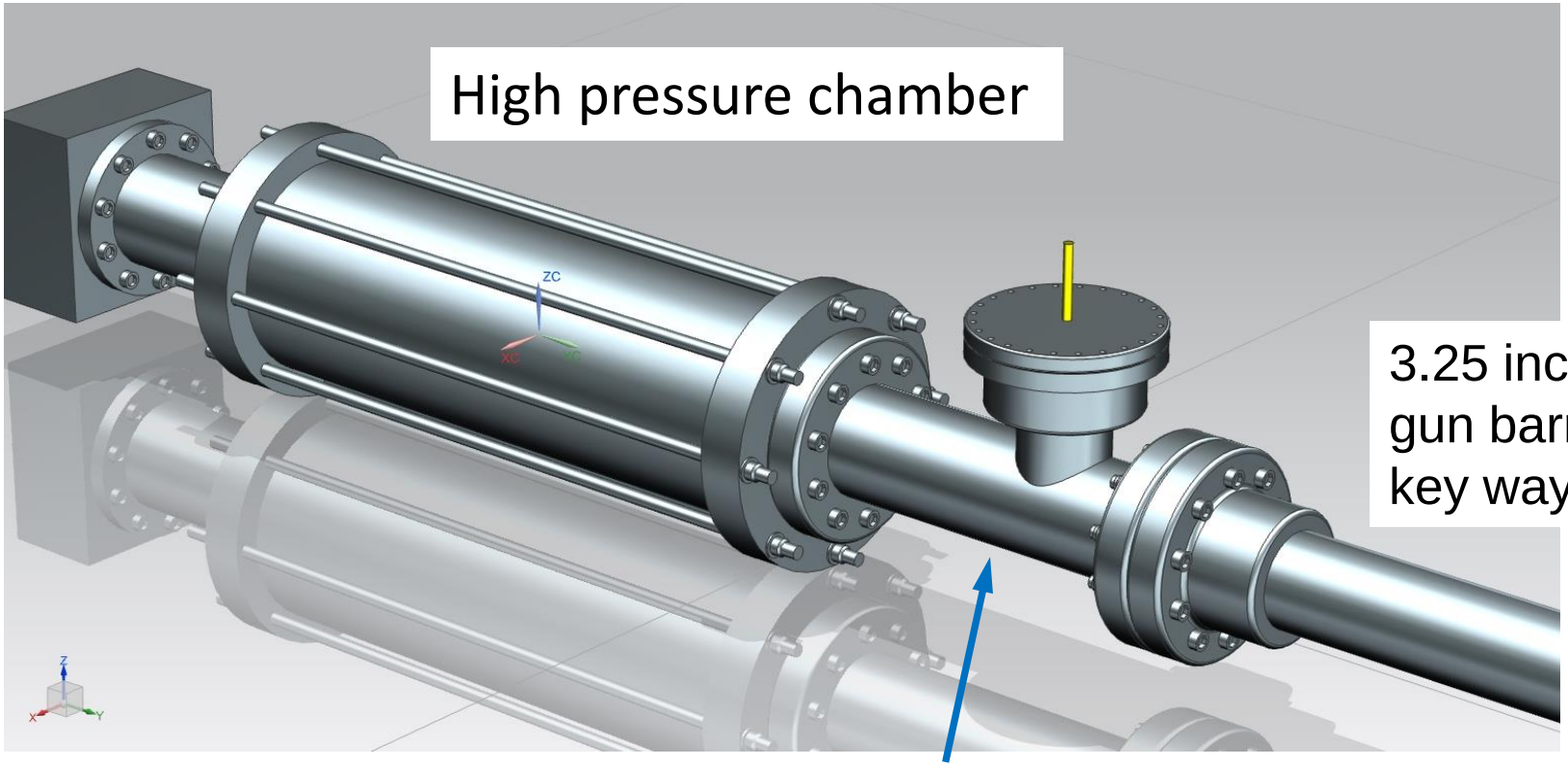

Extension to the gun barrel to Incorporate the heater assembly

32 amp and 20 Volts for
1200°C operation
in oxidizing environment

Heater with Linear and
Rotational degrees of freedom

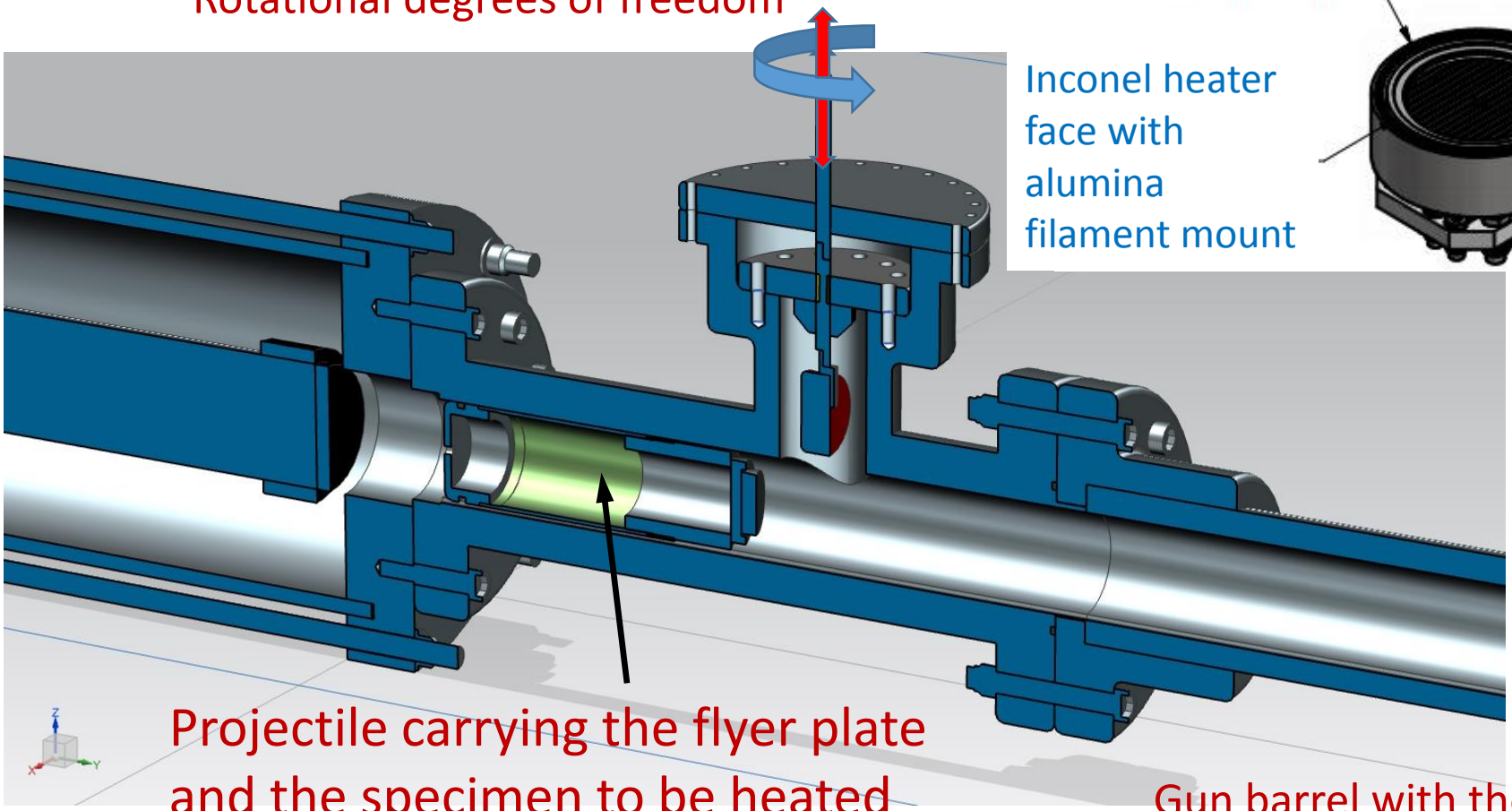

Inconel heater
face with
alumina
filament mount

Projectile carrying the flyer plate
and the specimen to be heated

Gun barrel with the
Keyway for conducting
Pressure-shear impact
experiments

Projectile Design

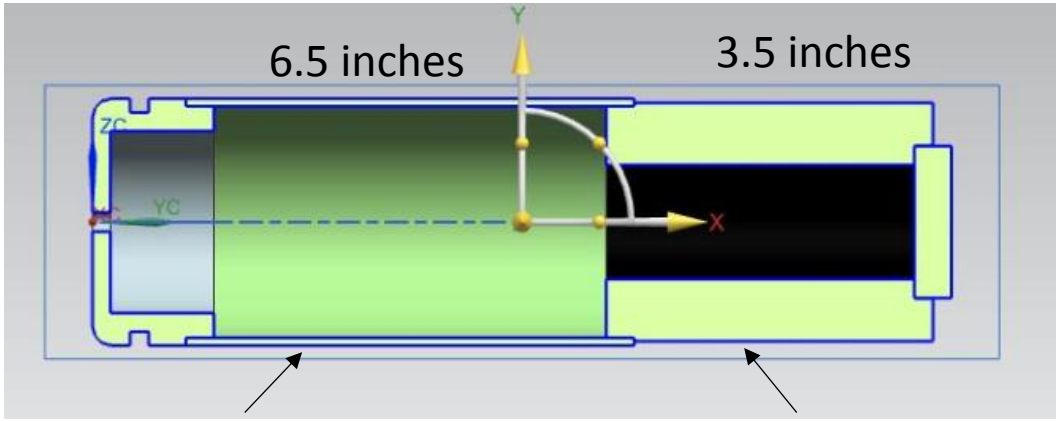

Constant Temp B.C. --1850 F from resistance heater

Aluminum body
k ~ 240 W/(m-K);
Thermal expansion 13 µ-strain/°C

Alumina silicate -- Lava-rock (fired);
Working Temp 2000 °F; k - 2 W/(m-K)
Density ~ 3 Kg/m^3
Thermal expansion 1.95 µstrain/°C

ID= 1.5” Solid cylinder

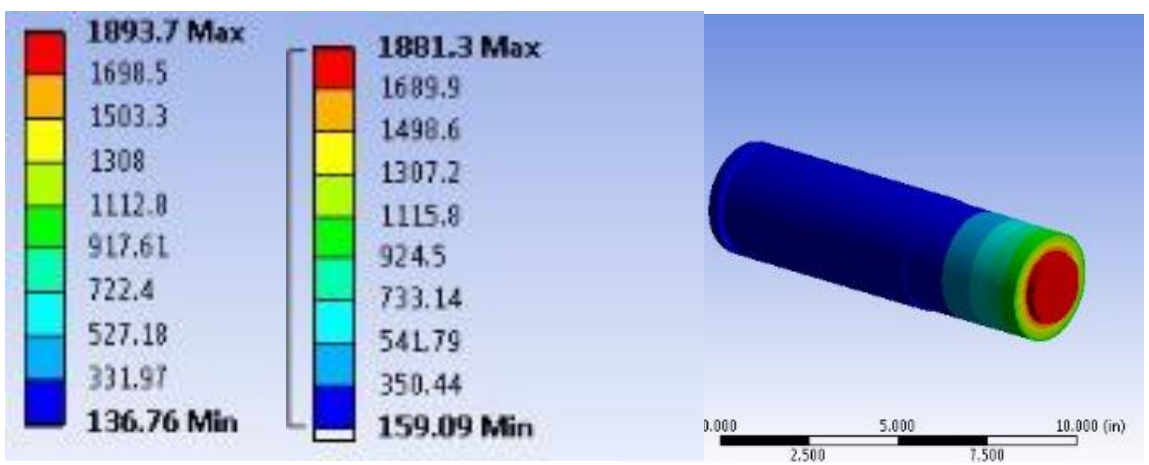

Degree F

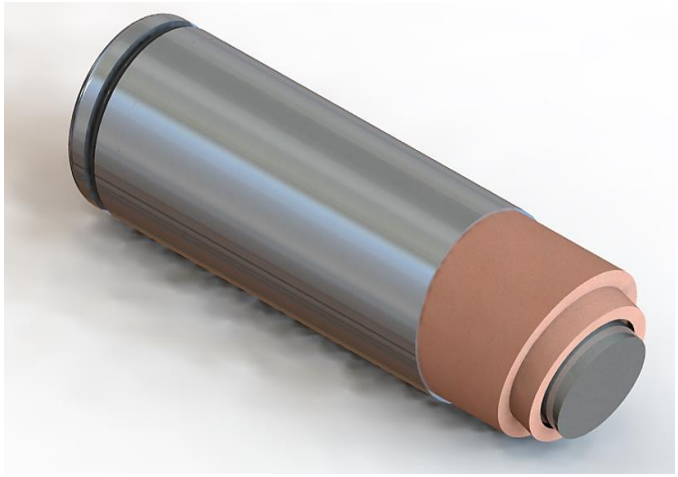

New Instrumentation for Combined Normal and Transverse Particle Velocity Measurements

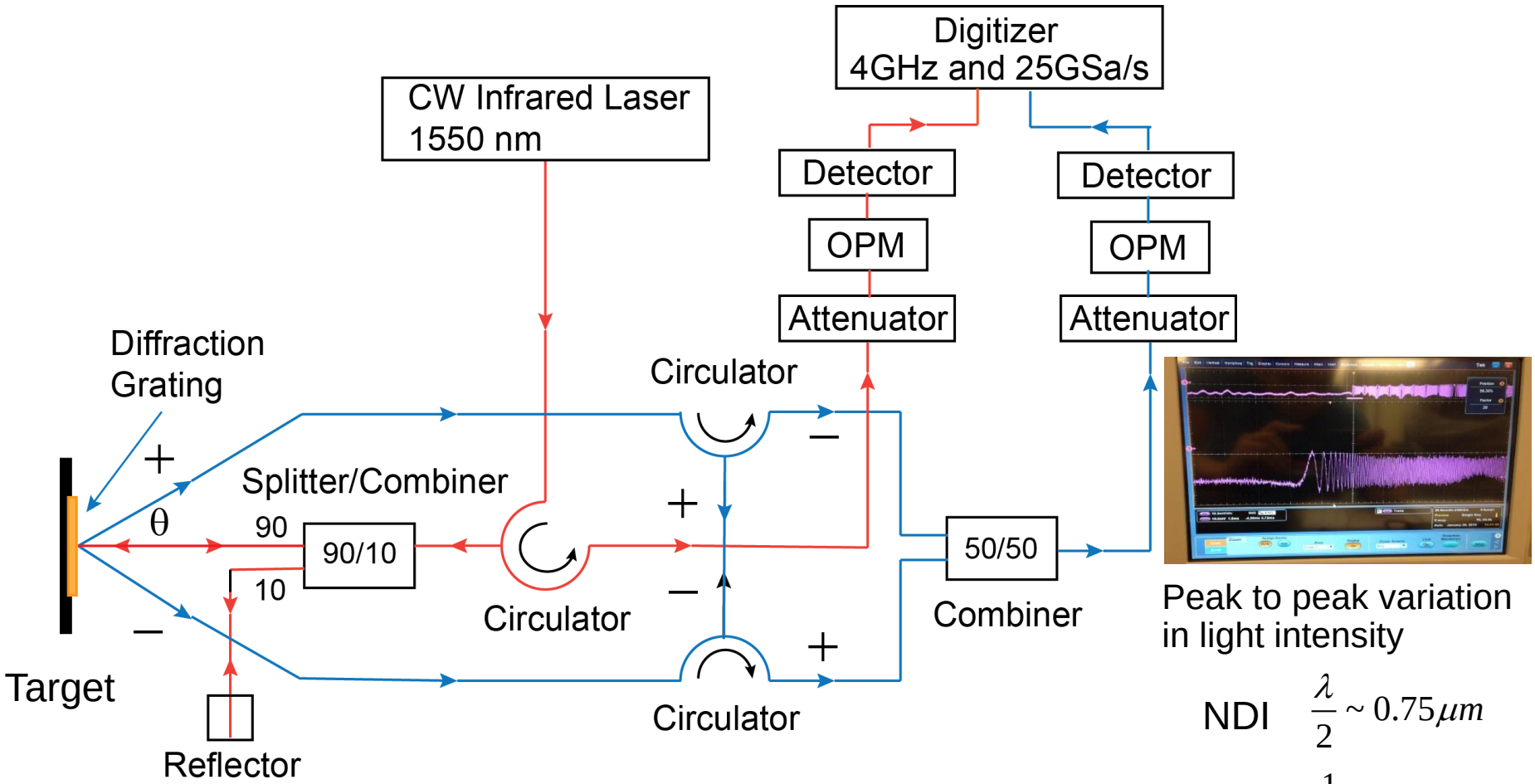

Peak to peak variation in light intensity

NDI $\frac{\lambda}{2} \sim 0.75\mu m$

TDI $\frac{1}{2p} \sim 0.5\mu m$

Pitch ~ 1000 lines/mm

Materials under Investigation

Magnesium (hcp)

Purity: 99.9%
Melting point: 649 ^{o}C
Density at 20°C: 1.74 Kg m^{-3}
Quasi-static yield strength: 69 MPa
Thermal exp coeff: 14.44×10^{-6} /^{o}F

Aluminum (fcc)

Purity: 99.999%
Melting point: 660.4 ^{o}C
Density at 20°C: 2.7 Kg m^{-3}
Quasi-static yield strength: 10 - 35 MPa
Thermal exp coeff: 13.1×10^{-6} /^{o}F

- Dynamic strength at incipient plastic flow at elevated temperatures.
- Dynamic shearing resistance at elevated temperatures and plastic strain rates in excess of 10^{6}/s.

Magnesium 99.9% Purity

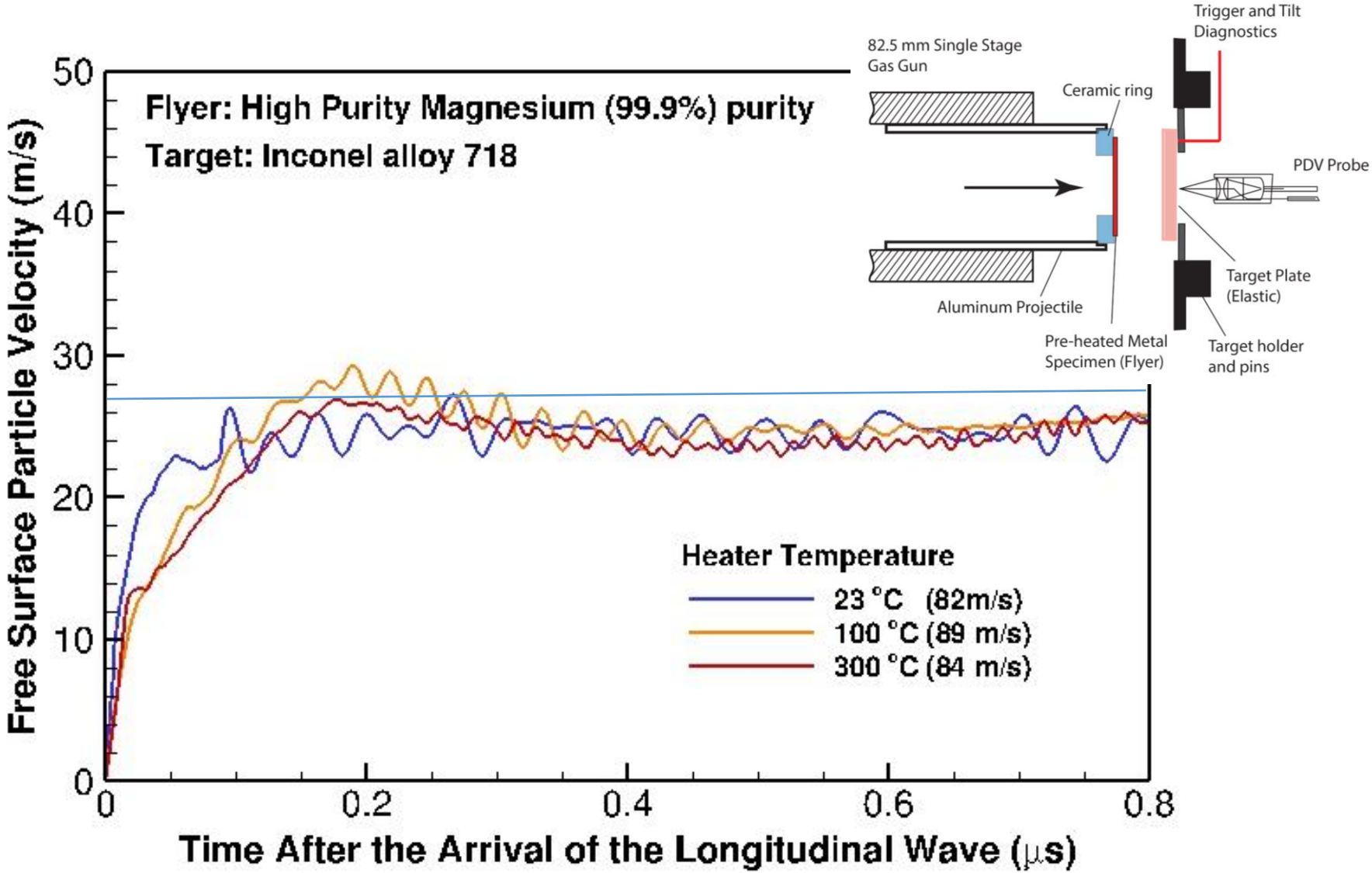

Aluminum 99.999% Purity

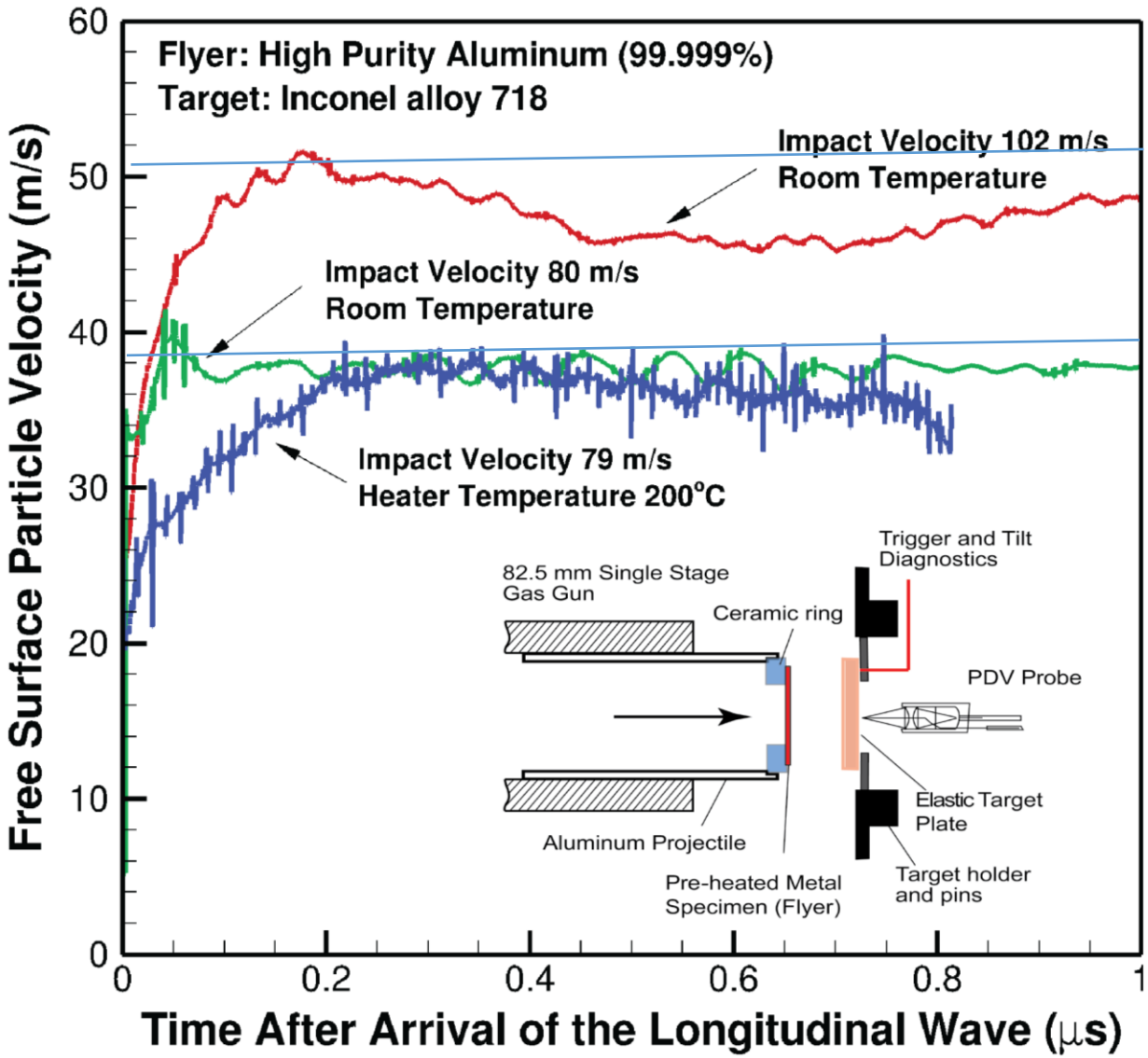

New Sabot Design to hold the Flyer Plate
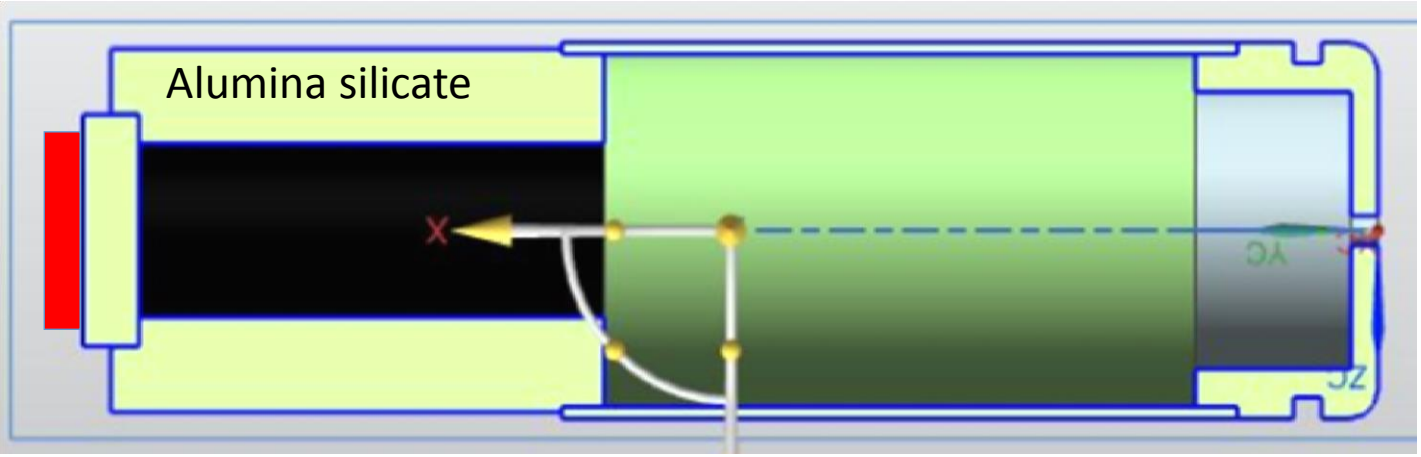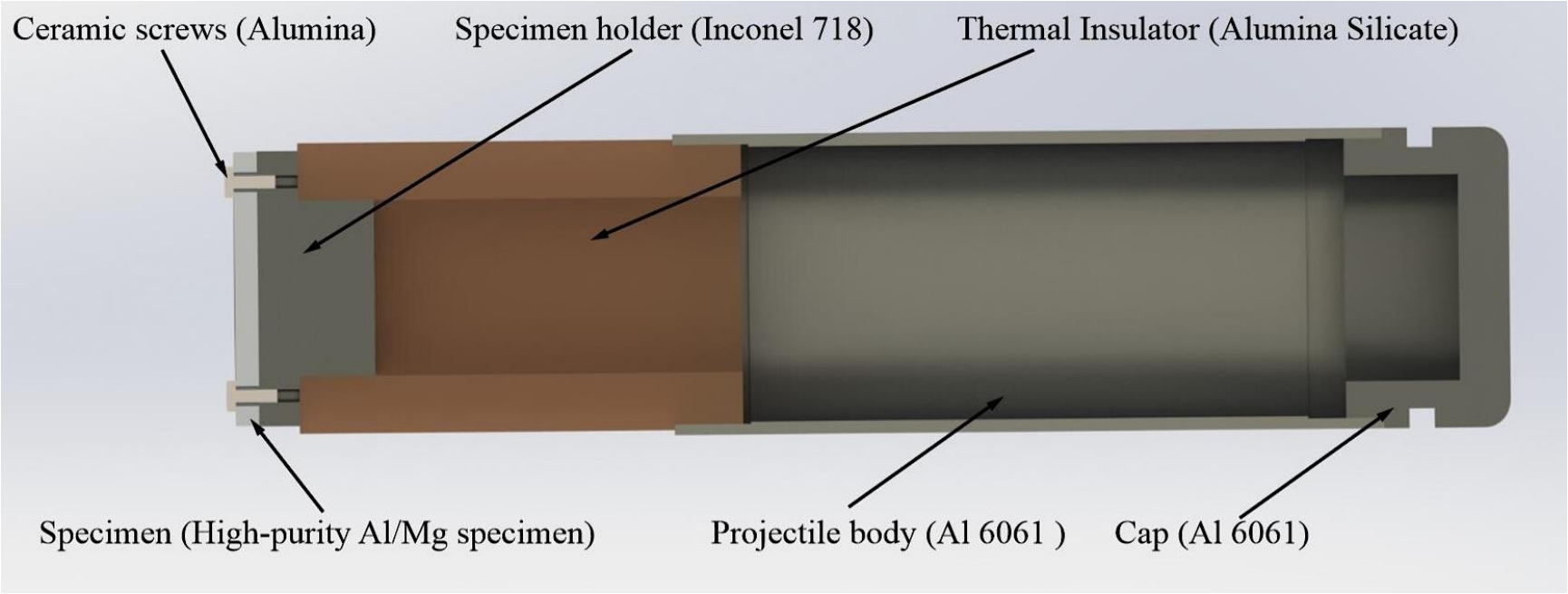
Omega Bond
OB-300 Cement
> Service Temp
-- 982°C
> Air cure
> Strength
Tensile 3 MPa
Shear 5 MPa
Rupture Mod. 3 MPa