White Paper for *Frontiers of Science Panel*

Date of Submission:	15 June 2015

Indicate the primary and secondary areas.

• Plasma Atomic physics and the interface with chemistry and biology	
• Turbulence and transport	S
• Interactions of plasmas and waves	P
• Plasma self-organization	S
• Statistical mechanics of plasmas	S

Indicate type of presentation desired at Town Hall Meeting.

Title: Oral	
Poster:	
Either Oral or Poster:	
Will not attend:	X

Title:	Velocity Distribution Function Signatures of Kinetic Plasma Physics Processes
Corresponding Author:	Gregory G. Howes
• Institution:	University of Iowa
• email:	`gregory-howes@uiowa.edu`
Co-Authors:	none

• ***Describe the research frontier*** **and importance of the scientific challenge.**

An emerging frontier in the study of the kinetic plasma physical processes in weakly collisional laboratory, space, and astrophysical plasmas is the *exploration of the plasma dynamics and energetics through measurements and analysis of the particle velocity distribution functions*. Any collisionless process that leads to heating or other energization of the plasma particles inevitably leaves a signature of that process in perturbations of the velocity distribution function of the affected plasma species. The dissipation of turbulence, the conversion of energy through collisionless magnetic reconnection, and the acceleration of energetic particles in weakly collisional plasmas are three grand challenge problems in fundamental plasma physics that significantly impact the fields of laboratory plasma physics, heliophysics, and astrophysics. A definitive determination of the dynamics and energy flow in any of these three problems will almost certainly require a coordinated analysis of not only the fluctuations of the electromagnetic fields, but also the associated perturbations of the underlying particle velocity distribution functions.

To break new ground in the analysis of particle velocity distribution functions requires the development of novel approaches to handle the processing of the six-dimensional data sets of kinetic plasma physics. A purely statistical approach, in such a high-dimensional system, is unlikely to deliver significant leaps in our understanding. Instead, it will almost certainly be necessary to employ insight from the fundamental plasma physics to reduce the data into an illuminating form. *The velocity distribution functions represent a largely untapped source for discovery science*, especially when such an approach not only examines the mean structure of the velocity distribution functions but also considers the dynamics of the perturbations to those mean distribution functions. In addition, the velocity distribution functions directly provide information about the statistical mechanical state of a weakly collisional plasma, opening up new possibilities for analysis.

• ***Describe the approach to advancing the frontier and indicate if new research tools or capabilities are required.***

The study of the dynamics of particle velocity distribution functions in weakly collisional plasmas requires advancement in spacecraft instrumentation, laboratory diagnostics, numerical simulation capabilities, and theoretical models.

To measure definitively any particular collisionless wave-particle interaction in a space plasma, it will likely be necessary to coordinate both electromagnetic field and plasma measurements. It has long been possible to measure directly the 3D velocity distributions of plasma particles (electrons and ions) on spacecraft, but full 3D measurements often require long integration times to yield an acceptable signal-to-noise ratio. Cadences on existing missions generally range from a few seconds to a few minutes, timescales that are often well separated from those of the collisionless wave-particle interactions of most interest in space plasmas. The recently launched Magnetospheric Multiscale (MMS) mission, and the upcoming Solar Probe Plus mission, both have significantly improved cadences for particle velocity distribution measurements. But to maximize the scientific return from the unprecedented plasma measurements to be made by these missions, significant developments in numerical simulation capability and theoretical models are essential, as discussed below.

Many important proposed wave-particle interactions involve the small populations in the tail of the particle velocity distribution functions. The controlled and reproduceable conditions of a laboratory experiment are ideal for the study of such wave-particle interactions, but perturbations in the tail of the distribution function are difficult to measure in the laboratory using traditional methods. Laser-induced fluorescence can be used to probe non-invasively the dynamics of ions in a weakly collisional plasma, but cannot be used to explore the electron dynamics. Wave absorption is a novel approach capable of detecting small variations in the tail of the distribution with great sensitivity [1, 2], as depicted in Figure 1, and can be used to measure the velocities of ions or electrons, as shown in Figure 2. Further refinement of such techniques to directly measure particle velocity distribution functions can open new avenues for the exploration of physical processes in weakly collisional laboratory plasmas.

In the past decade or so, significant advances in computing power have just made possible the exploration of kinetic plasma dynamics in three spatial dimensions using kinetic numerical simulation codes. Particle and continuum (grid) representations of velocity space are used with different approaches such as hybrid (kinetic ion and fluid electron), gyrokinetic, and fully kinetic codes. Although Particle-in-Cell (PIC) codes are the most widely used approach to explore numerically kinetic plasma physics mechanisms, the noise inherent in a particle representation of velocity space makes them not particularly well suited to explore the dynamics of the perturbations to the velocity distribution functions. A continuum (grid) representation of velocity space, although more numerically costly than a particle representation, is the optimal choice for exploring velocity-space dynamics. Therefore, dedicated efforts to achieve significant algorithmic and performance advances in kinetic continuum codes will contribute significantly to efforts in the analysis and interpretation of measurements of collisionless wave-particle interactions for many laboratory, space, and astrophysical plasmas of interest.

Finally, theoretical efforts should be focused on identifying suitable reductions of the six-dimensional kinetic plasma physics measurements and simulations to highlight the plasma physical process of interest. Sophisticated correlations of electromagnetic fields and plasma measurements can be used for on-board analysis of spacecraft observations and for in-depth analysis of laboratory measurements to identify and characterize the kinetic plasma physical mechanisms at play in the grand challenge problems of plasma turbulence, magnetic reconnection, and particle acceleration.

• ***Describe the impact of this research on plasma science and related disciplines and any potential for societal benefit.***

The interactions between electromagnetic fields and plasmas particles play a central role in the flow of energy in many important plasma environments. In fusion plasmas, wave-particle interactions can be used to achieve auxiliary heating of the plasma and the flux of fast fusion alpha particles in a burning plasma may drive unstable electromagnetic fluctuations that could degrade confinement. In the Earth's magnetosphere, magnetic reconnection in the magnetotail sends Alfvénic fluctuations Earthward along the magnetic field that accelerate electrons and lead to the generation of aurora, representing an important channel of energy flow in the coupled magnetospheric-ionospheric system. Also, collisionless wave-particle interactions almost certainly play a central role in the injection and loss of trapped high-energy particles in Earth's Van Allen radiation belts associated with the progression of a major geomagnetic storm. In the solar corona and solar wind, the collisionless damping of turbulent electromagnetic fluctuations ultimately leads to heating of the plasma. In addition, the collisionless shock formed by a rapidly propagating coronal mass ejection plowing through the ambient solar wind plasma appears to accelerate copious energetic particles the can harm human and robotic spaceborne assets. Further afield, the observational appearance of stellar and supermassive black hole accretion disks depends sensitively on the heating of the plasma as it falls in towards the black hole; turbulence driven by the magnetorotational instability in the differentially rotating accretion disk is ultimately damped collisionlessly, with the turbulent energy ultimately converted to the thermal energy of the plasma ions or electrons. In all of these systems, the fundamental interactions of the electromagnetic fields with the plasma particles will lead to signatures in the particle velocity distributions. Exploring the correlation between the fluctuations of the fields and the perturbations to the particle velocity distributions is a promising avenue to identify and characterize the energy flow in this very wide range of important plasma environments.

Although progress in understanding a number of the systems detailed above will impact the advancement of human knowledge rather than directly affect modern society, a better understanding of a few of those systems will directly benefit society. Improvement in the efficiency of proposed fusion reactors promises the possibility of clean energy for future generations, but much progress needs to be made before fusion is a viable source for the generation of electricity. Modern society has come to depend sensitively on satellite technology, in particular for communications and navigation. An increase of high-energy particles trapped in the Van Allen radiation belts can lead to degradation, and possibly failure, of key electronic components. In addition, solar energetic particle events can pose a threat to satellites as well as both robotic and human exploration of space. Understanding energetic particle acceleration, which necessarily involves acceleration a small number of particles in the tail of the velocity distribution to high energy, will help to protect both robotic and human assets in space.

References

[1] F. Skiff, D. A. Boyd, and J. A. Colborn. Measurements of electron parallel-momentum distributions using cyclotron wave transmission. *Phys. Fluids B*, 5:2445–2450, July 1993.

[2] D. J. Thuecks, F. Skiff, and C. A. Kletzing. Measurements of parallel electron velocity distributions using whistler wave absorption. *Rev. Sci. Instr.*, 83(8):083503, 2012.

[3] J. W. R. Schroeder, F. Skiff, C. A. Kletzing, G. G. Howes, T. A. Carter, and S. Dorfman. The Role of Suprathermal Electrons in an Inertial Alfvén Wave: Theory and Laboratory Measurements. 2015. in preparation.

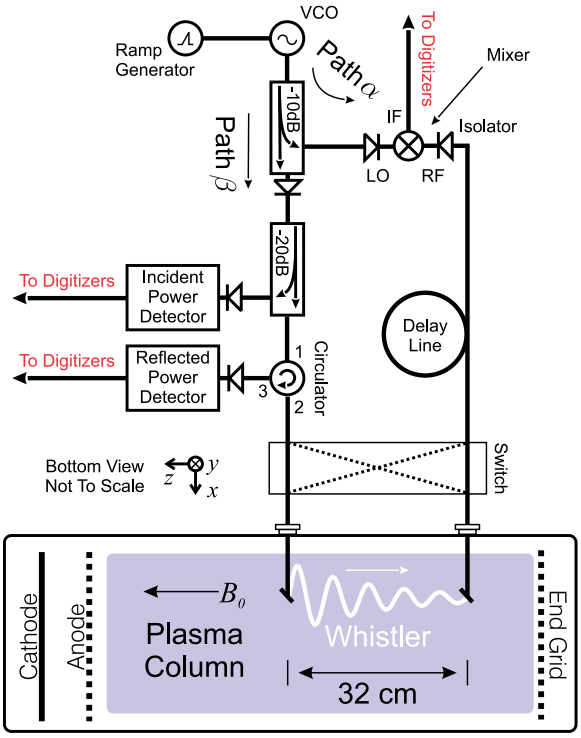

Figure 1: Schematic diagram of the Whistler Wave Absorption Diagnostic [2] and its implementation in electron acceleration experiments on the Large Plasma Device (LAPD) at UCLA.

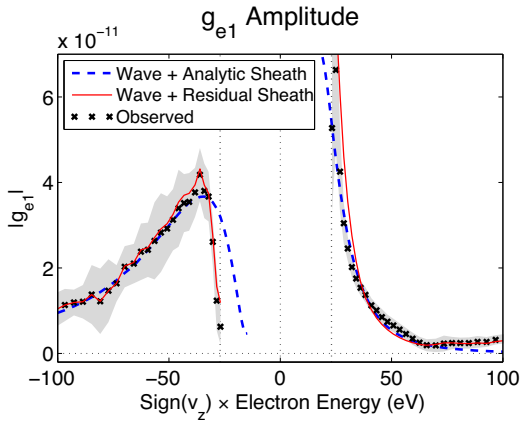

Figure 2: In the $T_e = 2$ eV LAPD plasma, an inertial Alfven wave is launched down the plasma chamber. Here we show measurements of the perturbations associated with that wave in the suprathermal tail of the electron distribution g_{e1} using the Whistler Wave Absorption Diagnostic. From Schroeder, Skiff, Kletzing, Howes, Carter, and Dorfman [3].