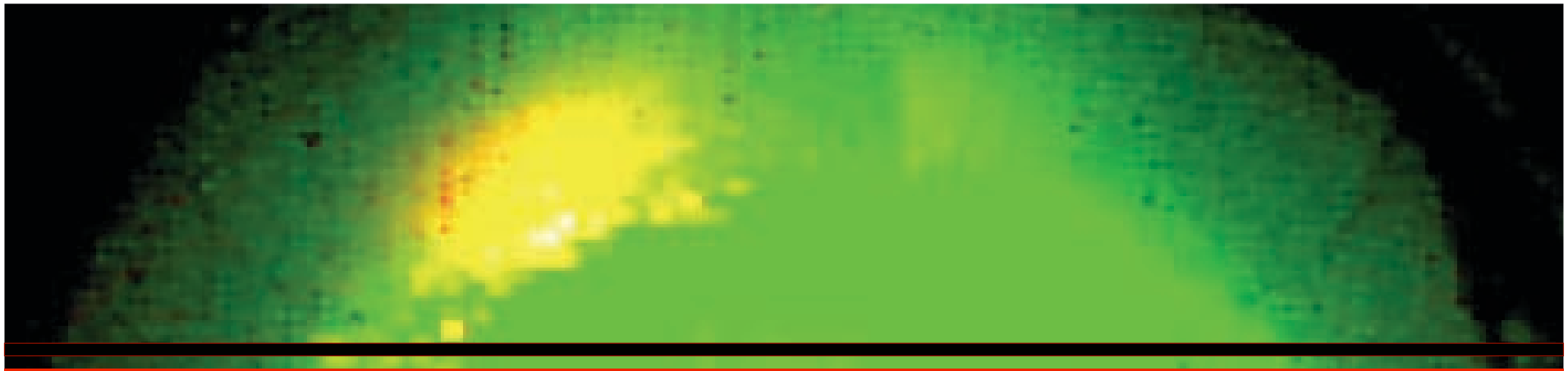

Plasmas, particulates, and plasma-facing surfaces at high magnetic fields

Virtual Town Hall on Plasma Self-Organization

August 12, 2015
Baltimore, MD

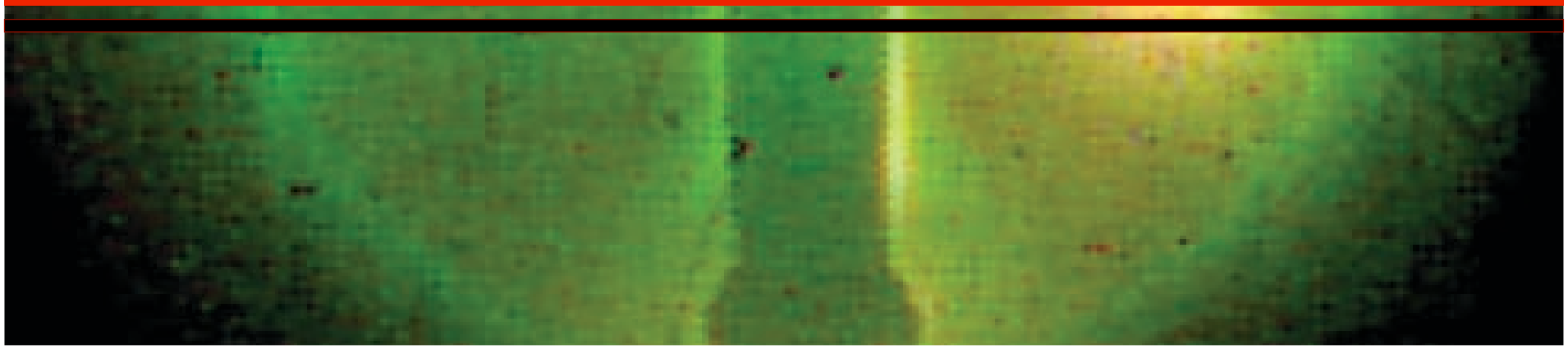

Authors

- C. A. Romero-Talamás
  romero@umbc.edu
  University of Maryland Baltimore County
- Z. Wang and G. L. Delzanno

  Los Alamos National Laboratory
- E. Thomas, Jr.
  Auburn University
- R. Kaita and M.A. Jaworski
  Princeton Plasma Physics Laboratory

Research Frontier

Development of fundamental theoretical, experimental, and numerical studies that couple strongly magnetized plasmas with processes that lead to the production and transport of particulate matter of different sizes and material compositions, in warm plasmas.

There are important, new opportunities for innovative research that can address the interactions between plasmas, particulates, and plasma-facing surfaces under conditions that go beyond the regime of low temperature, laboratory plasmas.

UMBC AN HONORS UNIVERSITY IN MARYLAND

Los Alamos NATIONAL LABORATORY EST. 1943

AUBURN UNIVERSITY

PPPL PRINCETON PLASMA PHYSICS LABORATORY

Approach

- Develop a new class of laboratory plasma sources that can deliver reasonably high density ($>10^{18}$ m^{-3}), warm ($T_e \geq 10$ eV, $T_i \geq 5$ eV) plasmas in reasonably strong magnetic fields ($B \geq 1$ T).
- Develop a dedicated theoretical and experimental program of plasma-materials interactions at realistic scenarios for high-temperature plasmas in which electron and ion temperatures are comparable, and plasmas are sufficiently dense and magnetic fields terminating at surfaces have sufficiently long conduction lines back to the hotter plasma to be representative of fusion-scale devices.

UMBC AN HONORS UNIVERSITY IN MARYLAND

Los Alamos NATIONAL LABORATORY EST. 1943

AUBURN UNIVERSITY

PPPL PRINCETON PLASMA PHYSICS LABORATORY

Basic Science: Complex Plasmas in High B-Fields

- Extend plasma science to new experimental regimes that have not yet been explored.
- Addition of a magnetic field to microplasmas, dusty/complex plasmas, and plasma processing may open new lines of basic research.
- The advancement of superconducting magnet technologies is important for medical industry, and is critical for the commercialization of fusion.

UMBC AN HONORS UNIVERSITY IN MARYLAND

Los Alamos NATIONAL LABORATORY EST. 1943

AUBURN UNIVERSITY

PPPL PRINCETON PLASMA PHYSICS LABORATORY

Societal Benefit: Realization of Fusion Energy

- Fusion energy offers many advantages over other sources:
  - Abundant fuel everywhere on Earth;
  - No air pollution and not dependant on seasonal variations;
  - No risk of a runaway reaction.
  - No high-level nuclear waste, and proliferation resistance.

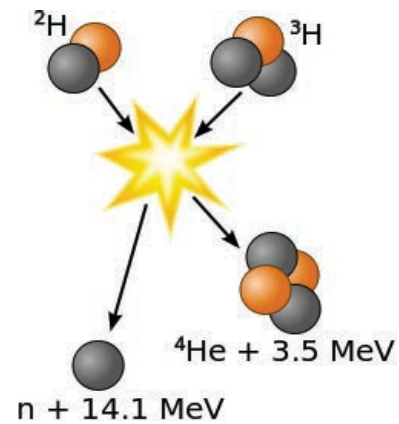

- Magnetic fusion plants would present low proliferation risk compared to fission.

- Physics and technology of plasma-materials interactions at reactor-relevant scenarios is expected to be crucial in any fusion concept.

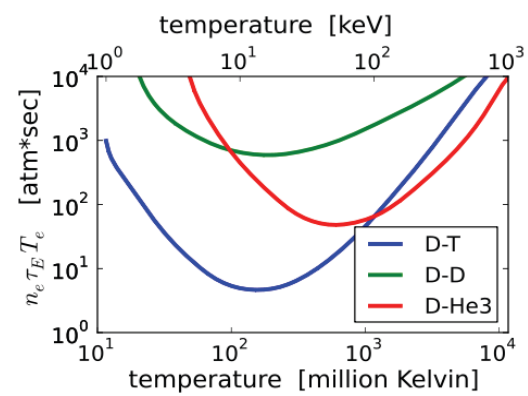

UMBC
AN HONORS UNIVERSITY IN MARYLAND

Los Alamos
NATIONAL LABORATORY
EST. 1943

AUBURN
UNIVERSITY

PPPL
PRINCETON
PLASMA PHYSICS
LABORATORY

Extreme Heat → erosion → Dust generation near surfaces (physics + chemistry)

Coagulation

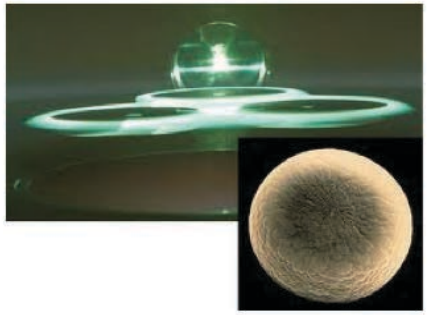

Selwyn (1989)
Merlino & Goree (2004)

Arc, q > 30 MW/m^2,
Liquid/molten surface

Redeposition

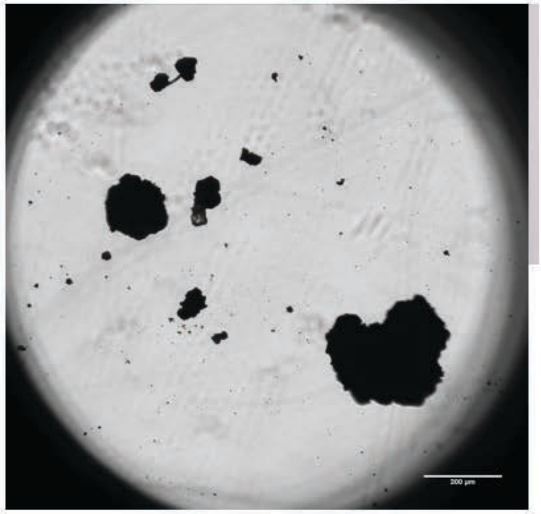

ITER estimate: 350 MJ, several 10s of kg/disruption

Dust transport in MF plasmas, a "dusty" problem

- **Ablation physics**
  - Mass not conserved
  - Rocket effect

$$\frac{dm_d}{dt}\mathbf{u}_d + m_d\frac{d\mathbf{u}_d}{dt} = \sum_j \mathbf{F}_j$$

- **Warm ions, high dust temp.**
  - Charge, motion, energy balance
- **Large gradient**
  - Radiation zone within closed fluxes
  - SOL ~ 1 cm thick, heat flux 30 MW/m^2, x10 in ITER
- **Irregular dust geometry, shape, composition**
  - Point/Sphere approximations break down (Tensor force, fine grid/long computation time)
  - Additional degrees of freedom (rotation, spin)

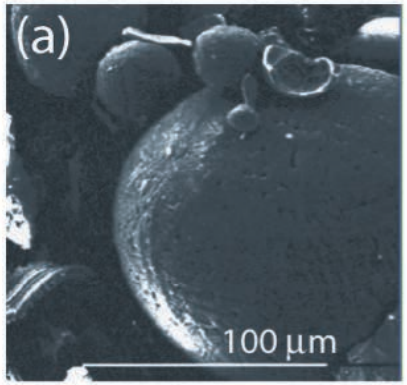

Winter, PoP (2000)

Dust is a critical player for ITER

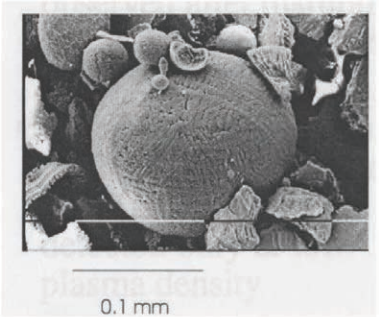

- Presence of dust (UFOs) known for a long time
- Produced by plasma-material interaction, maintenance
- Not an issue in short-pulse tokamaks: lower heat load $q_{ref} = 1\,\mathrm{MW/m^2}$
- A problem in ITER-era: higher heat load $q_{ref} = 10\,\mathrm{MW/m^2}$
  - hundreds kgs of dust estimated for ITER
- Operational issues:
  - Dust penetration. Plasma pollution, disruptions
  - PMI. Dust survivability. Non-local redeposition
- ITER dust safety limits

Table 1
Safety and administrative limits for tritium and dust in vessel inventories taken into account in this study.

	Safety limits	Administrative limit
In vessel T inventory	1 kg	700 g
Global in vessel dust inventory	1 ton	670 kg
Dust on hot surfaces	6 kg of C, 6 kg of W, 6 kg of Be If no C present, 11 kg for Be, and 230 kg for W*	No assessment available

* ITER Organisation has recently (2009) reduced this limit to 77 kg W.

Dust survivability is key:
can we really have that many kgs?

Summary of dust transport studies in ITER-like conditions

	Small injection speed	Critical poloidal injection speed for survivability (L/τ_{melt})
Small particles: r_d~0.1 μm	Redeposits locally	12 km/s
Medium particles: r_d~1 μm	Redeposits non-locally: mass migration	750 m/s
Large particles: r_d~10 μm	Can survive: PMI loss+ nonlocal redeposition	0 m/s

→ Needs to be complemented (i.e. generation rate vs dust size) by the material science perspective: more experiments!

→Needs better dust transport models: OML is not adequate in certain regimes

G. L. Delzanno and X. Tang, LANL

Properties of a magnetized dusty plasmas

- Strong magnetic field will guide ion and electron transport to surfaces - for electrodes and dust grains.
- Charging of surfaces and dust grains may be significantly modified.
- Formation of sheaths will become asymmetric parallel and perpendicular to the magnetic field.
- How is the growth of small grains affected at high magnetic field - e.g., formation of elongated particles?
- Can 2D ordering of dust be maintained at high B?
- In warm plasmas, how will the heating and emission from grains affect their transport?

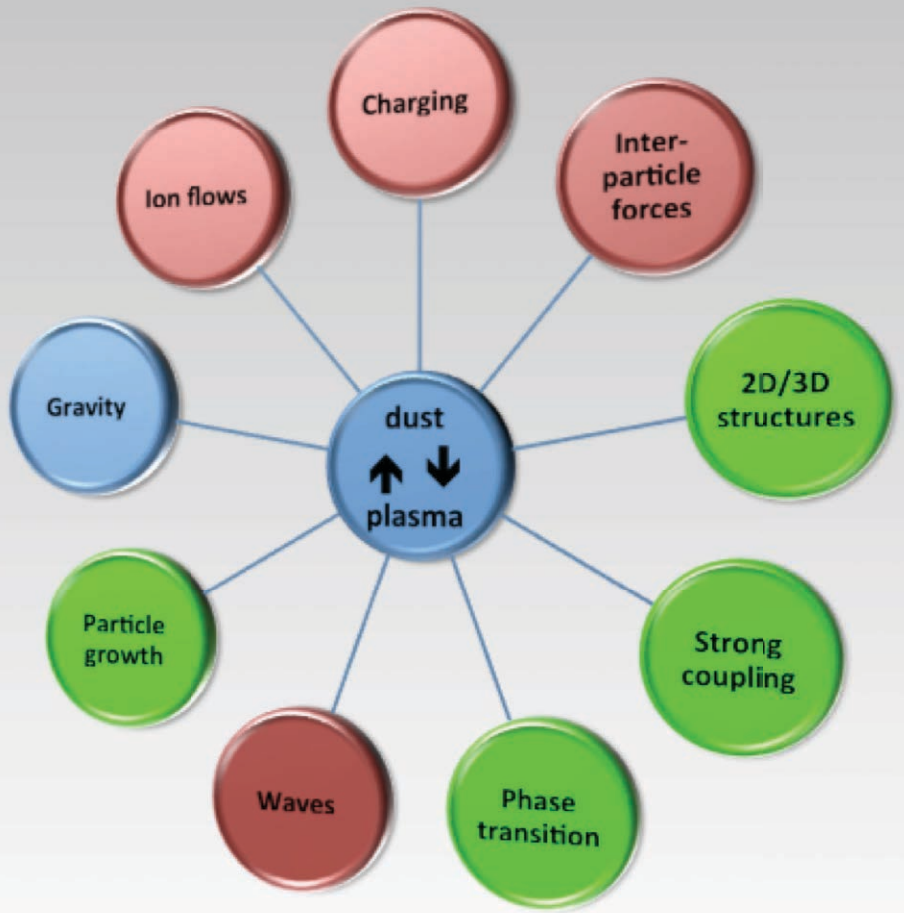

MDPX parameters: final "as-built" system

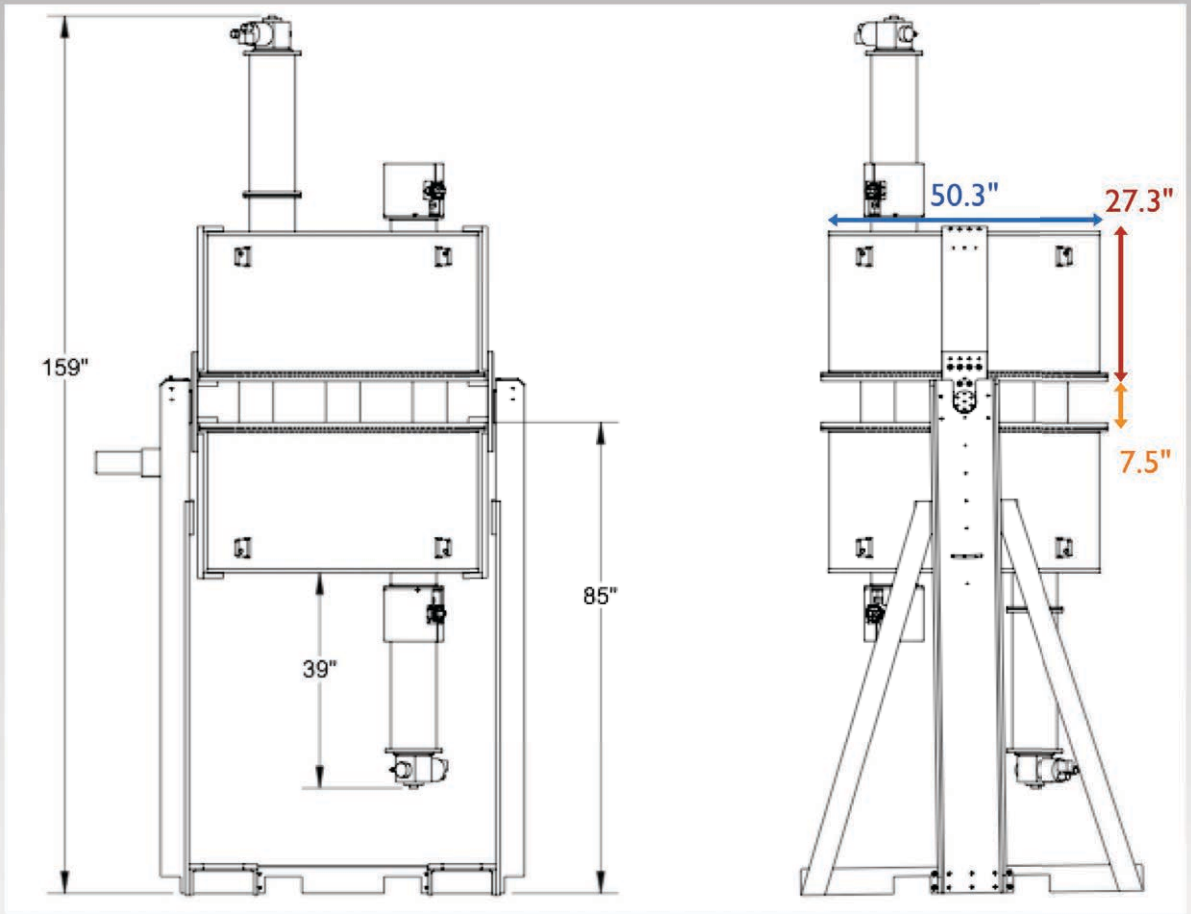

Magnetic field:	3.0 T (to date); 4 T (max)
Magnetic field gradient:	1 - 2 T /m
Magnet cryostat:	50 cm ID / 127 cm OD
Magnet material:	NbTi superconductor; cryogen-free system

Magnet performance:	$T_{critical}$ = 6.4 K; $T_{minimum}$ = 4.2 - 4.8 K
Experiment volume:*	45 cm dia. x 175 cm axial
Uniform region:*	20 cm dia. x 20. cm axial
Total cold mass:	~2.5 tons

E. Thomas, Jr. , Auburn U.

MDPX: Plasma operations and diagnostic systems

- Octagonal vacuum chamber:
  355 mm ID, 178 mm height
  Excellent diagnostic access
- Vacuum chamber / plasma source can be easily "swapped".
- RF generated plasmas:
  f = 13.56 MHz, P_{RF} = 2 to 10 W
- Argon @ P = 1 to 300 mTorr
- Silica microspheres
  <dia> = 0.5 μm, 2 μm, 8 μm
- Diagnostics:
  Triple probe (n_e, T_e,V_p)
  DPSS lasers
  Top camera (4 Mpix, 90 fps)
  Side camera (1.2 Mpix, 150 fps)
- Plasma parameters (@ B = 0 T):
  T_e = 3 eV, T_i = 1/40 eV
  $n_e \sim n_i \sim 2$ to 8×10^{15} m^{-3}

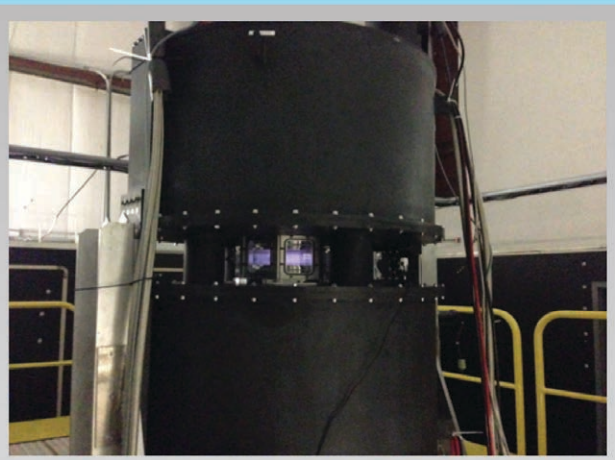

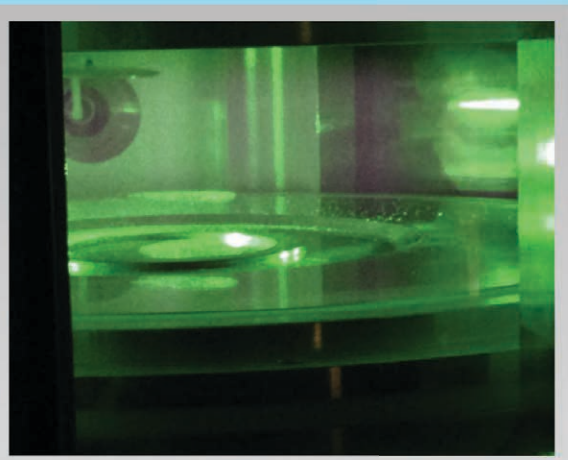

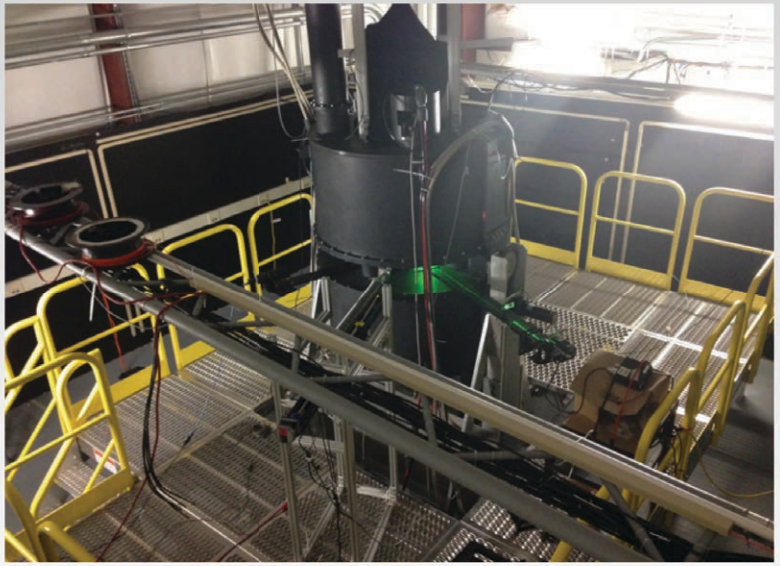

MDPX device is ready to begin collaborative studies with external users

AUPSL

AUBURN UNIVERSITY

UMBC 10 T Facility

- A Bitter-type electromagnet with 15 cm bore is being designed and constructed at the Dusty Plasma Laboratory in UMBC to investigate, among many research topics, viscous heating and stability of E x B rotating plasmas.
- Experiments[1,2] at the Maryland Centrifugal Experiment (MCX) demonstrated electron and ion temperatures of > 100 eV with < 10 MW of total input power with plasma densities 10^{20} - 10^{21} m^{-3} and total plasma volume ~0.5 m^3.
- Magnetized dusty plasmas may be used as emulators of rotating magnetized plasmas at the atomistic level.
- Interest to investigate viscous heating and stability at high |E|/|B| ratios.
- Velocity shear and temperature profiles possible to measure simultaneously in a rotating dusty plasma.

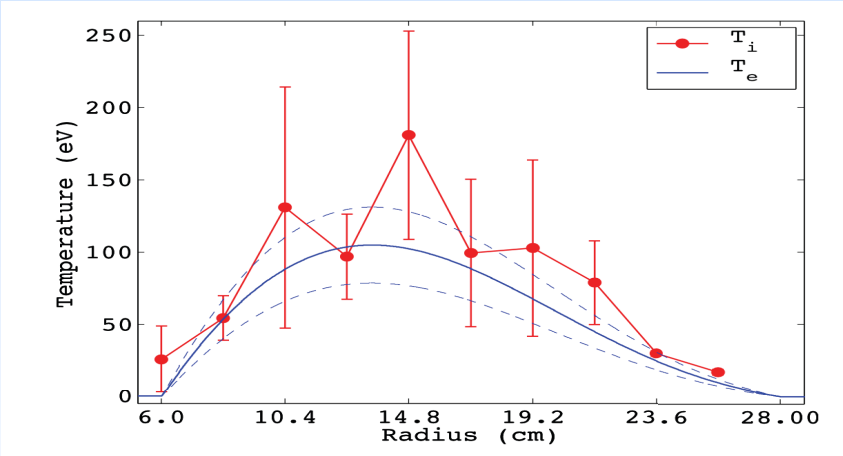

T_i and T_e profiles in MCX.

R. R. Reid, C. A. Romero-Talamás, *et al., Phys. Plasmas* **21**, 063305 (2014).

High B allows particle of large size to be tracked individually

- **E** x **B** drift theory disregards particle mass. However, single particle calculations show very different picture.
- Plan to use spheres (ρ ~ 1500 kg/ m^3), assuming Z*e =10^4 e, B = 10 T, v = 0.25 m/s, r = 500 nm, and E_r = 2.5 V/m.
  - Parabolic profile shows higher stability in calculations.
- High fields allows particle trapping, with standard optical equipment and software to be used in tracking individual particles in large ensembles.

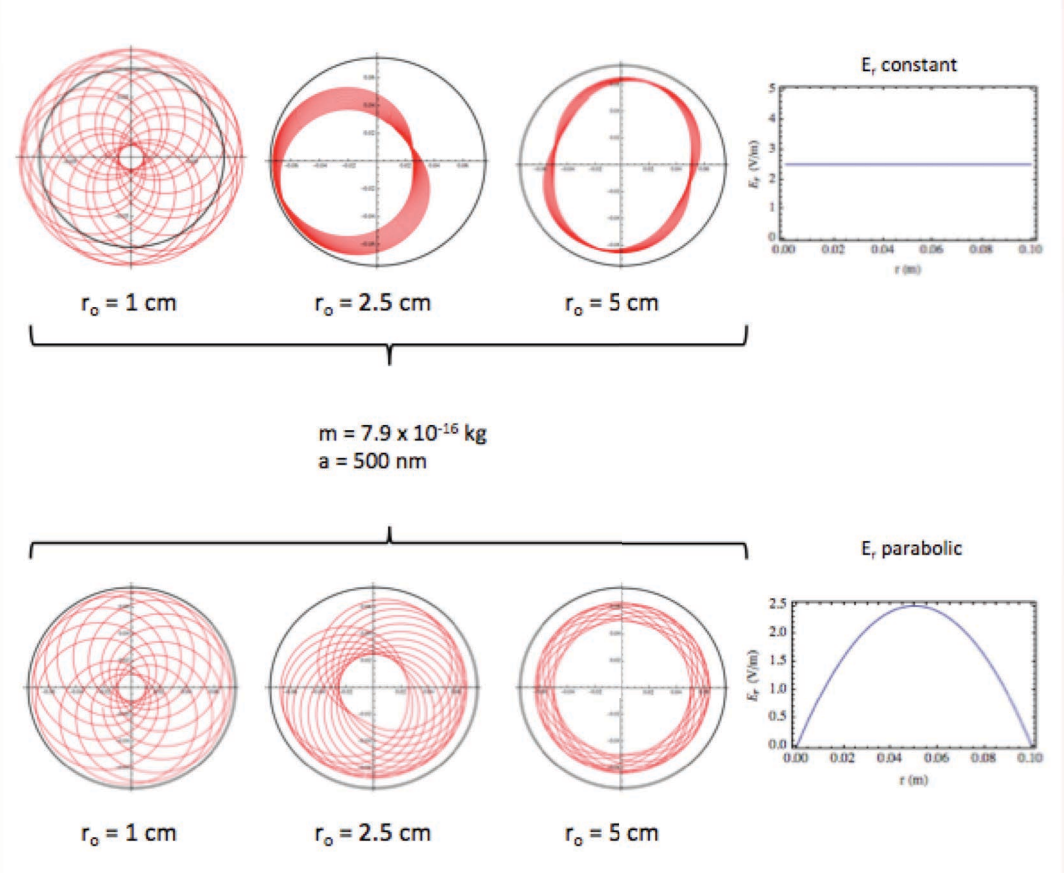

C.A. Romero-Talamás et al.

UMBC
AN HONORS UNIVERSITY IN MARYLAND

Electromagnet Design

- Resistive, Bitter-type magnet allows experimental flexibility in field strength and gradient.
- Fields up to 10 T with a minimum time of 10 s duration, for 20 experiments per day.
  - Longer pulses possible, but fewer events per day (depending on energy storage and cooling water flow rate).
- Programmable lower fields possible with much longer pulse times.
  - 4 T fields to compare/ complement experiments with MDPX

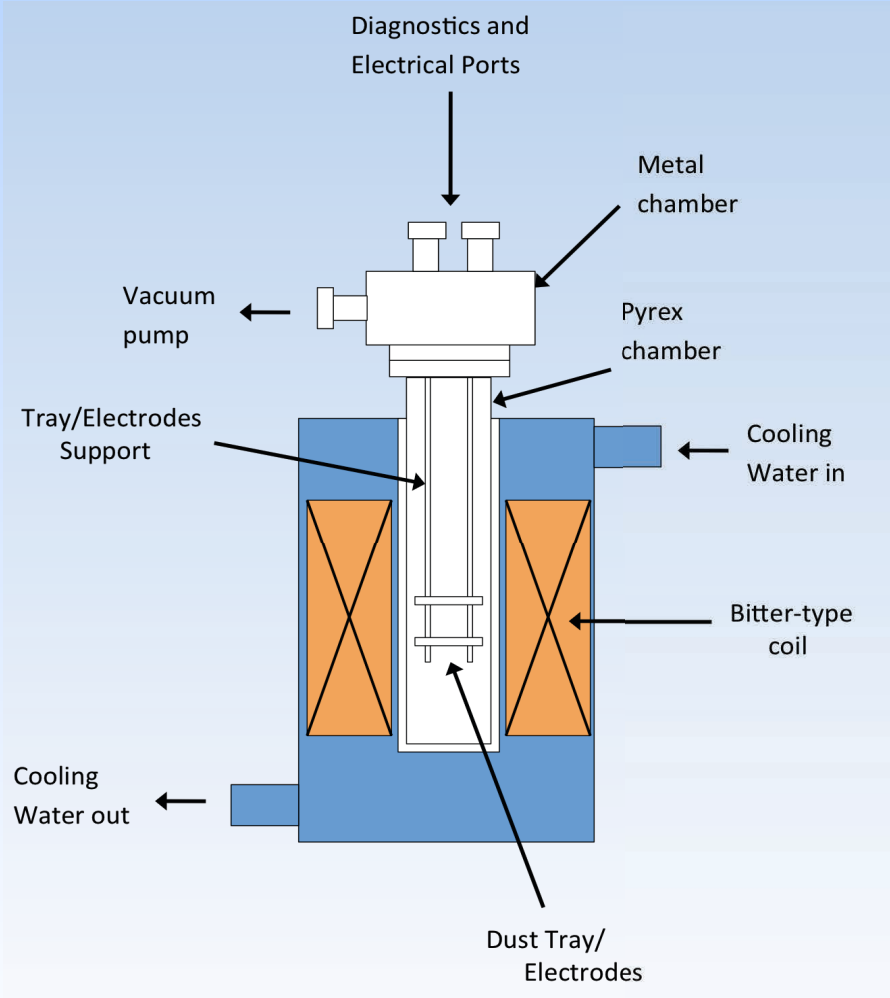

C.A. Romero-Talamás et al.

Electrode Design

Constant E_r Electrode Configuration

- A constant, steady, radial electric field configuration can be created with a biased center post and a conducting cylinder above the RF plate.
- Optics and other diagnostics must come from the top.

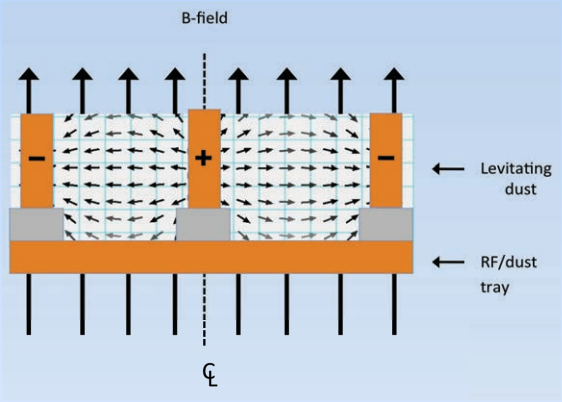

Parabolic E_r Electrode Configuration

- A parabolic, steady, radial electric field configuration can be created with a biased center plate and a conducting annular plate above the RF plate.
- Optics and other diagnostics can come from the side or the top (between annular plates).

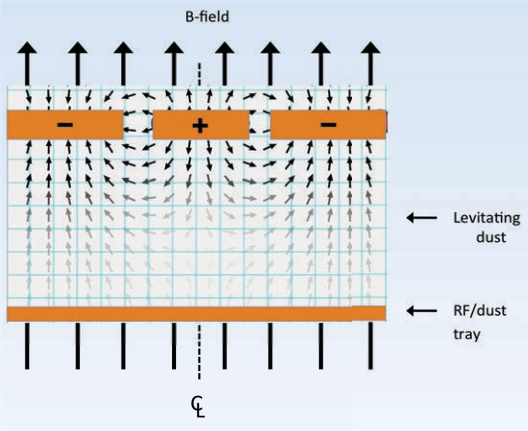

- The entire magnet will be rotatable to orient B with respect to gravity, but at present have not designed mechanism to orient E as well.
- Mechanism inside vacuum use 3D-printed parts.

Prototype Magnet

- To verify design and manufacturing procedures, a 1/10 scale working prototype is being built at low cost.
- Up to 1-Tesla fields in a 1.25”-diameter bore.
- Although not intended for magnetized dusty plasmas, it will be available for other physics experiments, including testing of glow discharges with different E-field configurations as the magnet is energized.
- Magnet construction underway. Expected Fall 2015.

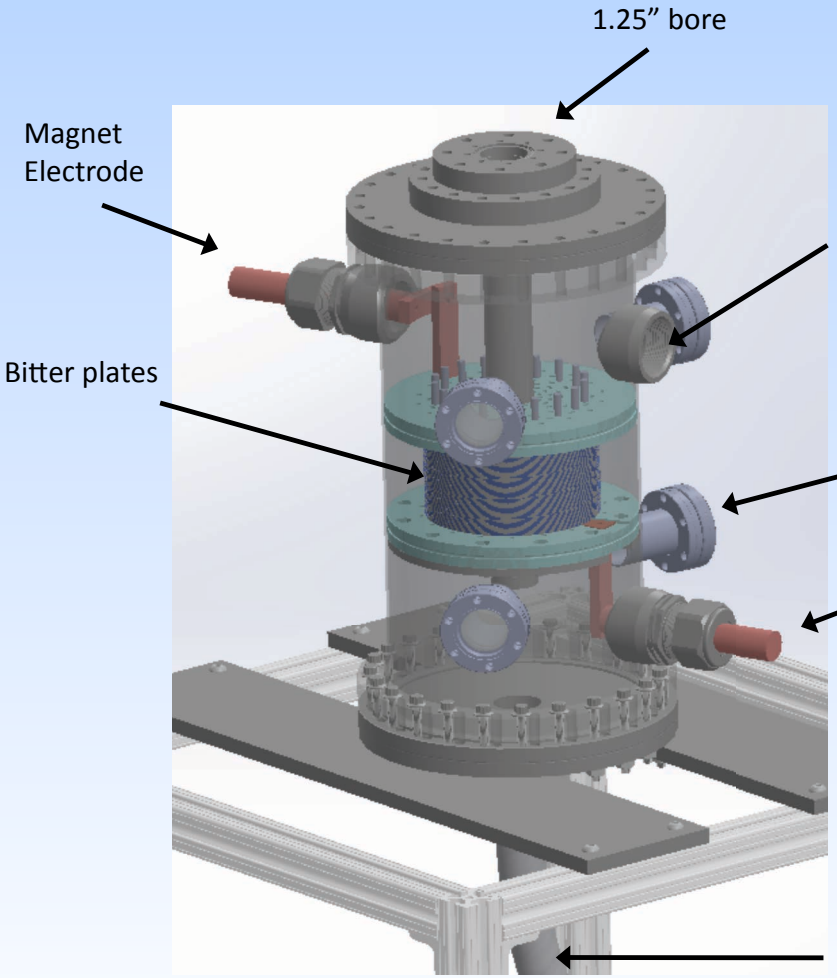

Summary

- Magnetized dusty plasma, the next frontier in complex plasma science.
  - Fundamental questions in self-organization in presence of high B-fields need to be addressed.
- Plasma-Material Interactions (PMI) crucial to realization of commercial fusion energy.
  - Dust in high T plasmas span orders of magnitude in scale size, time-scales, and may be very dynamic.
  - Need to understand how to mitigate/control dust production and removal.
- Request for more support for theoretical and experimental research in magnetized dusty plasmas.
  - Producing steady, high B-field in large enough volume a significant engineering challenge.

UMBC AN HONORS UNIVERSITY IN MARYLAND

AUBURN UNIVERSITY

Los Alamos NATIONAL LABORATORY EST. 1943

PPPL PRINCETON PLASMA PHYSICS LABORATORY