Methanotrophic-Mediated Metal Binding: Effects on *In Situ* Microbial Community Structure and the Sustainability of Subsurface Water Systems

Jeremy D. Semrau[1*] (jsemrau@umich.edu), Alan A. DiSpirito[2], and Nathan Bandow[2]

[1]University of Michigan, Ann Arbor, Michigan; [2]Iowa State University, Ames, Iowa

http://sitemaker.umich.edu/methanobactin

Project Goals: Methanotrophs are ubiquitous in the environment, and despite their critical function in many different ecosystems, the biogeochemical factors that affect their activity and community structure are poorly understood. It is known that copper plays a key role in methanotrophic physiology, but the mechanism used by these microbes for copper acquisition was only recently discovered. This compound, methanobactin, is the first example of a "copper-siderophore", or chalkophore. Like siderophores, methanobactin binds many different metals, including mercury. Further, as found with siderophores, recent data show that different methanotrophs make different forms of methanobactin that have varying metal affinities. The general objectives of this proposal are thus to consider how methanobactin made by different methanotrophs alters the bioavailability of metals of concern to the DOE and how this affects: (1) the physiology, metabolism and gene expression in pure cultures of methanotrophs; (2) the broader microbial community structure and meta-transcriptome in laboratory soil columns, and; (3) the bioavailability and risk associated with different metals in subsurface environments.

One of the persistent and substantial problems in remediation of hazardous waste sites is the mobilization and uncontrollable transport of radionuclides and heavy metals from these sites to surrounding areas. Some microbially-mediated processes can at least temporarily immobilize and reduce the toxicity of these materials through dissimilatory reduction that leads to precipitation and sorption under anaerobic conditions. As such, microbial-mediated processes can limit the dispersal of these materials and thus also limit the exposure of surrounding areas. Microorganisms, however, have effective and ubiquitous mechanisms to solubilize different metals and that non-specific binding of metals by these biogenic metal chelators may increase their solubility, mobility, and bioavailability. Here we propose to consider how the expression of metal chelating agents analogous to siderophores in methane-oxidizing bacteria i.e., methanotrophs, alters the bioavailability of various metals (e.g., copper and mercury) and how this: (1) affects the physiology, metabolism and gene expression in methanotrophs; (2) affects the broader microbial community structure and meta-transcriptome, and; (3) increases the bioavailability and risk associated with various metals. Such studies will enable us to determine how methanotrophic activity may affect the structure of subsurface microbial communities as well as the sustainability of subsurface waters, including at DOE sites.

This project, starting in September, 2011, has as its immediate objective the characterization of metal binding by methanobactin produced by different methanotrophs. The molecule has been identified in a number of methanotrophs, but has only been structurally characterized from *Methylosinus trichosporium* OB3B (mb-OB3b) and *Methylocystis* strain SB2 (mb-SB2). mb-SB2 shows a significant similarity to mb-OB3b, including spectral and metal binding properties, and the ability to bind and reduce Cu(II) to Cu(I). Both forms of methanobactin contains similar five-member rings and associated enethiol groups, which together, form the metal ion binding site. Further, greatest amounts of methanobactin are found when both *Methylosinus trichosporium* OB3B and

Methylocystis strain SB2 are grown in low (< 1 μM) copper. Significant differences exist between the two known forms of methanobactin (Figure 1), including: (1) the number and types of amino acids used to complete the molecule, (2) mb-OB3b has two oxazolone rings for copper binding, while mb-SB2 has one imidazolone ring and one oxazolone ring, and; (3) a sulfate group is found in mb-SB2 but not in mb-OB3b. The sulfate in mb-SB2 is bonded to a threonine-like side chain and may represent the first example of this type of sulfate group in a bacterial-derived peptide. The gene sequence for a ribosomally produced precursor for mb-OB3b has also been identified in the genome of *Methylosinus trichosporium* OB3b. It indicates that the oxazolone rings in mb-OB3b are derived from glycine and cysteine residues. Taken together, the results reported here suggest methanobactins are a structurally diverse group of ribosomally-produced, peptide-derived molecules that share a common pair of five-member rings with associated enethiol groups that bind and reduce copper in aqueous environments.

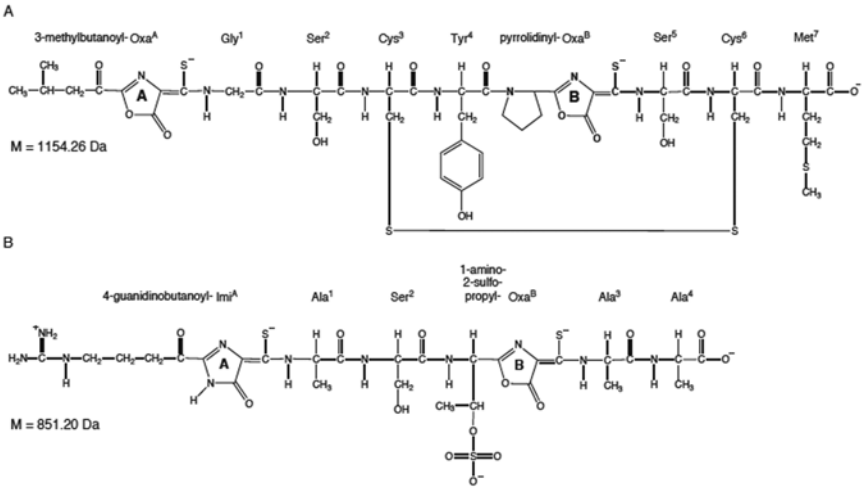

Figure 1. Primary structure of methanobactin from (A) *M. trichosporium* OB3b and (B) *Methylocystis* strain SB2.

Comparison of the spectral and thermodynamic properties of mb-SB2 demonstrate that the spectral and basic copper binding properties of both methanobactins were similar and the metal binding capacity, particularly for copper, of both methanobactins lies primarily, if not solely, in the pair of five-membered rings and associated enethiol groups. To date, we have surveyed the range of metals bound by both forms of methanobactin, and have found that both forms bind many different metals, including mercury, chromium, lead, and uranium, and that metals are typically reduced after binding by methanobactin.

Next steps will characterize the effect of methanobactin-mediated metal speciation on activity and transcriptome of pure cultures of methanotrophs. In addition, we will collect groundwater and soil samples from the Integrated Demonstration Site of the DOE Savannah River Site where methanotrophs are known to exist and characterize how methanobactin affects metal mobility and bioavailability in the presence of soils from this site as well as methanobactin-mediated dissolution of soil-associated minerals using a set of spectroscopic and imaging techniques. The resultant effects on the broader microbial community structure and function will be also be determined using a "double-RNA" approach to characterize microbial community structure and function simultaneously from the meta-transcriptome.