U.S. Department of Energy
Technical Qualification Program

OAK RIDGE OPERATIONS OFFICE DEFENSE NUCLEAR FACILITIES

Study Guide

Oak Ridge National Laboratory (ORNL)

Developed by the
OAK RIDGE OPERATIONS OFFICE
TRAINING AND DEVELOPMENT DIVISION

AUGUST 1997
REVISION 0

III. OAK RIDGE NATIONAL LABORATORY (ORNL)

ORNL is responsible for the development of new energy sources, technologies, materials, and the advancement of knowledge in the biological, computational, environmental, radiochemical, physical, and social sciences.

As a DOE multi-program laboratory, ORNL conducts basic and applied research and development to advance the nation's energy resources, environmental quality, scientific knowledge, educational base, and industrial and economic competitiveness. ORNL's core competencies are:

- Energy production and end-use technologies
- Advanced materials synthesis, characterization, and processing
- Biological and environmental science and technology
- Neutron-based science and technology
- Computational science and advanced computing
- Instrumentation, manufacturing, and control technologies (an emerging core competency shared with the Oak Ridge Y-12 Plant)

ORNL has three defense nuclear facilities:

- Building 3019 — Radiochemical Development Facility (RDF)
- Building 7830 — Melton Valley Storage Tanks (MVSTs)
- Gunite tanks

The RDF is a Manhattan Project vintage building that has received numerous upgrades and modifications over the years. During the building’s 50-year history, the RDF has been the site for development and operation of several methods for nuclear fuel processing (e.g., PUREX, THOREX, Flouride Volatility).

The MVSTs provide storage capacity for the ORNL Liquid Low Level Waste (LLLW) System and include tanks W-24 through W-31.

The Gunite tanks were originally used for the collection, storage, neutralization, and transfer of the aqueous portion of the radioactive and/or hazardous chemical wastes produced as part of the normal facility operations at ORNL. All 15 tanks (8 at the North Tank Farm, 6 at the South Tank Farm, and Tank 11) no longer receive wastes and are considered out of service.

Building 3019 — Radiochemical Development Facility (RDF)

The mission of the RDF is to serve as the National Repository for ^{233}U. To accomplish this mission, the RDF maintains the following capabilities:

- Physically handle multi-kilogram quantities of ^{233}U
- Process multi-kilogram quantities of ^{233}U and enriched uranium in gloveboxes and/or

shielded storage cells

Other processes that can be performed at Building 3019 include storage of ^{233}U, uranium acid dissolution, ion exchange separation, physical separation of raw material, oxidation of material, and three uranium disposition processes (dry melt blending, aqueous nitrate blending, and dry mix processing).

The key operations processes that can be performed at the RDF include:

- Handling multi-kilogram quantities of ^{233}U
- Processing multi-kilogram quantities of ^{233}U

Handling multi-kilogram quantities of ^{233}U

Radioactive material is received and transferred generally by two methods depending on final destination of the material. Material can be received/transferred at the North loading dock area where it can be moved into Building 3019 or into the Building 3100 Storage Vault. Material can also be received/transferred at the Penthouse Crane Bay on the south side of Building 3019 and moved directly into the Penthouse.

Prolonged physical handling operations are conducted by using remote handling devices to maintain the containers at least three feet from the worker. Operations in close proximity to the materials are allowed for very brief periods or on low radiation level containers. For containers with higher radiation levels, physical handling operations are conducted using heavily shielded transfer casks and shielded confinement cells. Shielded transfer casks are mechanically operated locally and moved using cranes.

Processing multi-kilogram quantities of ^{233}U

Processing activities with multi-kilogram quantities of ^{233}U can be performed in gloveboxes and/or shielded confinement cells. Glovebox activities can be performed in the following spaces:

- Room 201
- Rooms 22, 26, 29, 110, 112, 113, 114, 142, 144, 145, 150
- Building 3100 glovebox room

Activities within shielded confinement cells were intended to be conducted in process cells 1 - 7. The equipment in cells 3, 5, 6, and 7 are technically in a stand-by condition but it is doubtful that any of this equipment would ever be used to process radioactive material again. Cell 4 is dedicated to storage and is a High Radiation Area.

Processing activities in gloveboxes and/or shielded confinement cells are limited by worker radiation protection regulations and the established safety envelope. Processing activities include a diverse range of chemical reactions and physical processes:

- Dry melt blend processing
- Aqueous nitrate blending
- Dry powder blending/Dry mix processing
- Uranium solids dissolution
- Precipitate and filtration
- Ion exchange separation
- Physical separation of raw material
- Weighing and NDA of material
- Thermal disassociation
- Oxidation of material (high temperature furnace/smelters)
- Material packaging
- Waste immobilization
- Material sampling/characterization

The principal radioactive materials processed within the RDF include natural thorium, natural or depleted uranium, and fissile uranium containing varying concentrations of ^{235}U and/or ^{232}U, neptunium, and plutonium. Typically small amounts of transuranium elements, fission products, and other radionuclides are sometimes present as impurities in the metals, alloys, oxides, and other compounds that are received and subsequently processed at the RDF.

The major safety risks to facility workers, aside from the typical industrial environment safety risks, are due to the nuclear materials being processed and stored. These materials present radiological (fissionable and radioactive materials) and chemical (toxic, corrosive, and reactive materials) hazards. There are no major safety risks to the public from the processes or storage of materials in the RDF.

Radiological

There are two major isotopes of concern for uranium at the RDF: ^{232}U and ^{233}U. Because of the isotope half-life and the half-life of the decay daughters, ^{232}U is the greater source of radiation and presents the greater hazard. ^{233}U is considered fissile while ^{232}U is only considered fissionable. Because ^{233}U is readily fissile, care must be taken in the design of process equipment and procedures to avoid criticality.

Uranium and its compounds present biological hazards through ingestion and inhalation. Chemical toxicity appears as kidney damage and acute necrotic arterial lesions. Soluble uranium compounds (e.g., uranyl nitrate) pass easily through the body resulting in little damage from ingestion of relatively large amounts to be absorbed. Insoluble compounds have a highly toxic effect to the lungs in the form of irradiation. Some compounds associated with certain forms of uranium can also be toxic, such as hydrogen fluoride with the uranium fluorides.

Chemical

Pure uranium is a heavy metal that exists as silver-white or black crystals. It is highly toxic and a radiation hazard. When in the form of a solid or dust, it can be a dangerous fire hazard when

exposed to heat or flame. Uranium dust can also be an explosion hazard when exposed to flame in the presence of oxygen.

Uranium metal can react vigorously, even violently, with oxidizing agents. Large solid pieces are fairly stable but will corrode on the surface. Corrosion of uranium metal has negative consequences. First, it converts a cohesive metal solid to a dispersible oxide dust. Second, under wet conditions, it can lead to a fire or explosion hazard or container pressurization due to hydrogen evolution.

UO_2 is stored in the RDF and is the most common compound used in reactor fuels (in a compressed pellet form). In a very fine powder, UO_2 is potentially pyrophoric.

UF_4 and UF_6 are stored in the RDF. UF_4 is nonvolatile and was used in the Molten Salt Reactor Experiment. UF_6 is volatile, meaning it is highly reactive with water and moist air, forming uranyl fluoride and releasing hydrogen fluoride both of which are chemically toxic. Inhalation and ingestion of UF_6 are acutely serious health threats. UF_6 must be stored in gas-tight, corrosion-resistant canisters.

Building 7830 — Melton Valley Storage Tanks (MVSTs)

Eight 50,000-gallon underground storage tanks are the MVSTs. The function of these tanks is to provide storage capacity for the ORNL LLLW System. The LLLW System provides collection, volume reduction, and storage of ORNL LLLW for facilities that generate LLLW. The system's primary purpose is to contain the LLLW and prevent release of radioactive contaminants to the ground or air and minimize, to the extent possible, exposure to on-site personnel.

System Overview

The MVSTs are basically one component of a larger operating system. In general terms, the LLLW System collects, neutralizes, concentrates, and stores aqueous radioactive waste solutions from various ORNL sources (see following figure). The sources of these waste solutions are contaminated sinks and drains in research and development laboratories, radiochemical pilot plants, and nuclear reactors located in both Bethel and Melton valleys (Oak Ridge area of Tennessee).

LLLW Waste Simplified Flow Diagram

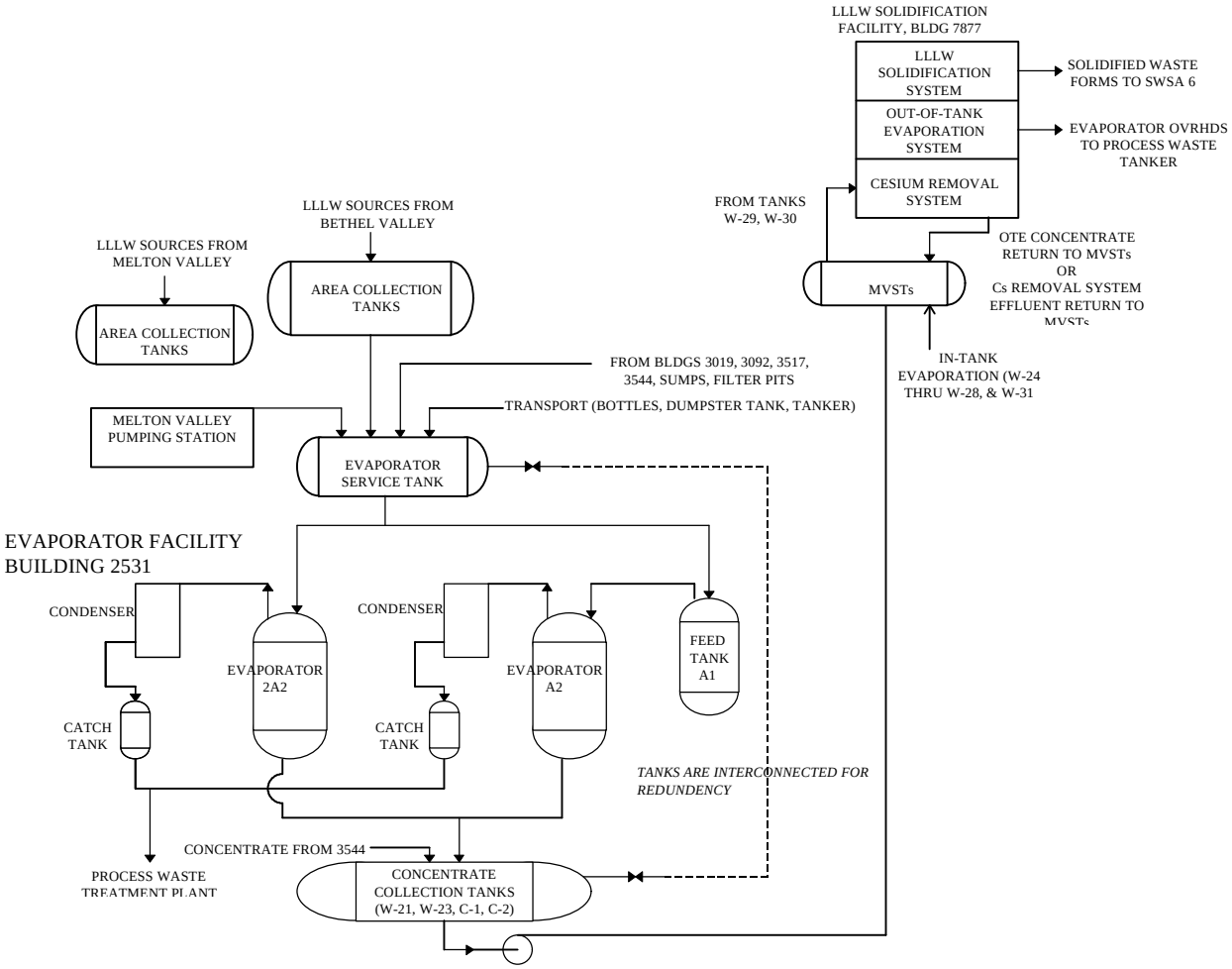

The waste solutions are discharged from the source buildings to a series of collection tanks, each located near the source building. The stainless steel tanks are of various capacities ranging from 500 to 15,000 gallons. Nineteen of the collection tanks are located in Bethel Valley and four are located in Melton Valley. Each collection tank is equipped with liquid level instrumentation and a filtered vent to the atmosphere or to the Central Off-gas System.

The waste solutions, which accumulate in the collection tanks, are periodically transferred to one of the three 50,000-gallon stainless steel storage tanks (usually W-22) near the evaporator building. These tanks are enclosed in underground, stainless steel-lined concrete vaults. A network of 2-inch and 3-inch diameter stainless steel pipelines buried directly in the ground connects the collection tanks to a 6-inch diameter double-contained stainless steel collection header that directs flow to the evaporator storage tanks. Transfer is made by pumps or steam jets.

Waste from the storage tanks is transferred to one of two evaporators where the aqueous solution

is routinely concentrated by a factor of 20 to 30. The radioactive concentration of the condensate is less than the feed solution concentration by a factor of 10^4 to 10^5. When the specific gravity of the concentrated waste reaches the desired concentration, the contents are cooled and then sent to a 50,000-gallon stainless steel receiving tank. There are three 50,000-gallon service tanks and two 50,000-gallon backup storage tanks, C-1 and C-2. Each tank can be configured for incoming storage or outgoing storage.

The concentrate stored at the evaporator is periodically pumped to one of eight 50,000-gallon stainless steel tanks located in Melton Valley near the hydrofracture site. These tanks, the MVSTs, are essentially identical to the evaporator storage and receiving tanks and are enclosed in underground stainless steel-lined concrete vaults. The process operations associated with the MVSTs include air sparging, liquid level monitoring, tank transfers, and content sampling. Transfer of the evaporator tank contents to the MVSTs is through approximately 6,000 feet of double-contained stainless steel pipe. This pipe is buried underground and is protected by heat tracing and liquid leak detection instrumentation.

The major safety risks to workers and the public resulting from operations at the MVSTs stem from the tank contents. The MVSTs contain:

- Fissionable materials — > 250 g of ^{235}U fissionable equivalent mass in the form of dissolved, suspended, and settled out solids in up to 150,000 gallons of LLLW supernatant and sludges

- Radioactive materials — Up to 400,000 gallons of LLLW supernatant and sludges in the form of dissolved, suspended, and settled out solids in an aqueous solution

- Toxic/corrosive/reactive materials — Up to 400,000 gallons of LLLW supernatant and sludges in the form of primarily sodium/potassium nitrate solution containing a variety of laboratory and process chemicals

These materials become a real concern in the event of a tank overfill or rupture. Tank overfills at the MVSTs may result from component failure of the tank isolation valve, tank level instrumentation failure, or operator errors. When the tank overfills, the liquid would most likely flow through the tank ventilation inlet duct and be released from the ventilation inlet by spilling to the ground. An airborne release of radioactive materials is initiated by the free fall liquid spill which continues until the overfill is detected and flow of liquid to the tank is terminated. At latest, the overfill would be detected during the daily check of facilities required by the OSRs (operational safety requirements). Until the leak is detected and terminated, on-site personnel and off-site receptors are exposed to airborne radioactive materials.

Gunite Tanks

The 15 Gunite and associated tanks (GAAT) were originally used for the collection, storage, neutralization, and transfer of the aqueous portion of the radioactive and/or hazardous chemical wastes produced as part of the normal facility operations at ORNL. The term ‘Gunite’ is used

with the tanks due to the construction process used for some of the tanks. As previously mentioned, the eight tanks at the North Tank Farm, six tanks at the South Tank Farm, and Tank 11 are no longer receiving wastes and are considered out of service. The North Tank Farm includes tanks W-1, W-1A, W-2, W-3, W-4, W-13, W-14, and W-15. The South Tank Farm includes tanks W-5 to W-10.

The tanks were built in the 1940s and have since been removed from service because of age and changes in liquid waste system needs and requirements. Though the tanks are no longer receiving wastes, some of the tanks contain between several hundred and several thousand gallons of LLLW and sludges. The tanks that have been successfully emptied require periodic pumping to the LLLW system for removal of tank inleakage.

The key operations processes performed at the GAAT are limited because the tanks are inactive. Ongoing surveillance and maintenance activities include weekly site inspections, tank inventory level monitoring, dry well monitoring, off-gas system monitoring (Tank W-1A only), and radiological surveys. Additionally, a treatability study is underway to assess the feasibility of emptying the tanks containing LLLW and sludge.

The GAAT Treatability Study involves the demonstration of sludge removal techniques and equipment for use in other waste storage tanks throughout the DOE complex. Sludges will be dislodged and transferred between tanks. A technique known as confined sluicing, which uses a high pressure, low-volume water jet integrated with a jet pump, is used. The deployment method for the confined sluicing uses a remotely operated vehicle; basically, a robot. The tracked vehicle, equipped with a plow type blade, is used to position and manipulate the confined sluicing equipment and to move sludge around the tank with the blade. The sludges will be sluiced out of the tanks and eventually transferred to the MVSTs.

Though the GAAT contain both radiological and hazardous materials, safety analysis identified no major safety risks to workers and the public resulting from operations at the GAAT.

The primary safety systems and features at the GAAT for preventing or mitigating operational accidents include tank level monitoring conductivity probes, off-gas system, and concave shaped cement pads under the tanks. Surveillance and maintenance activities are performed to ensure the conductivity probes provide an accurate indication of tank inventory levels. The off-gas systems include a HEPA filter for Tank W-1A and Stack 3039 for the South Tank Farm. Stack 3039 provides constant ventilation and maintains a negative pressure on the South Tank Farm tanks to prevent the buildup of hydrogen gas. Hydrogen gas presents a potential explosion hazard. The concave cement pads under the tanks collect any leakage from the tanks and provide a reliable indication of tank integrity.

Safety

The primary safety systems and features relied upon to reduce the risks associated with the operation of the RDF include:

- Hot cell structure, and
- Glovebox/Manipulator box structure, glovebox off-gas filtration, and ventilation duct system

The hot cell structure provides confinement during and following the design basis earthquake and large building fires. Additionally, the cell structure provides shielding from penetrating radiation associated with postulated criticality events.

The glovebox/manipulator box structure, glovebox off-gas filtration, and ventilation duct system includes the glovebox/manipulator box structure along with the glovebox off-gas (GBOG) header and duct system leading from manipulator boxes or gloveboxes up to and including one stage of HEPA filtration. Nuclear facility ventilation systems are designed to draw air from clean (or potentially cleaner) areas to areas of potentially higher contamination. All exhaust ventilation paths through potentially contaminated areas are passed through HEPA filters and air quality monitors before being released to the atmosphere. The GBOG system is designed to provide a volumetric flow of air (via filtered air inlets to gloveboxes) through the gloveboxes at low differential pressure.

Though not designated as safety-related equipment, Building 3019 is also equipped with a standby electrical power system, fire protection systems, and a criticality accident alarm system (CAAS) for facility safety.

The MVSTs have four features designed to prevent or mitigate accidents:

- Building 7830 facility structure
- Tank construction
- Secondary containment
- Tank level instrumentation

These structures and components are not designated as safety class SSCs but remain important to safety at the MVSTs.

The Building 7830 facility structure and the tank construction function to prevent leaks of LLLW in the event of earthquakes, vehicle impacts, and construction impacts.

The MVSTs have a secondary containment constructed of stainless steel lined vaults. The line vaults are capable of containing 100% of the respective tank contents (50,000 gallons for each tank W-24 through W-31). The secondary containment aids in the prevention of a release of LLLW should the primary containment be breached.

The tank level instrumentation functions in various ways to prevent or mitigate the effects of a leak. With the tank level monitoring system in service, a change in level indication could be an early sign of a system leak. The system also aids operators in monitoring tank level so as to prevent the inadvertent overfilling of a storage tank or alert an operator to a system misalignment during a solution transfer.

Again, though the GAAT contain both radiological and hazardous materials, safety analysis identified no major safety risks to workers and the public resulting from operations at the GAAT.

Waste Streams

Liquid waste streams for ORNL are generated as the result of laboratory experimentation, material processing, and groundwater in-leakage into the facility. Miscellaneous liquid waste streams, such as leaks to the cell floor sumps, are sometimes generated and are transferred into collection tanks. Waste solutions are sampled and analyzed to determine concentrations of fissile materials. If fissile materials are present in the waste, but their recovery is not economically feasible, the fissile materials are denatured (to provide criticality safety) and the solutions are transferred to the ORNL LLLW System.

Solid materials are generated as a result of laboratory equipment and routine facility operations. Contaminated solid wastes usually consist of gloves, shoe covers, small tools, obsolete equipment, and piping. These items are usually sealed in plastic bags and collected in metal containers. When filled, the containers are transferred to the ORNL Solid Waste Areas.

As previously mentioned, the sources of waste solutions to the LLLW System, and ultimately to the MVSTs, are contaminated sinks and drains in research and development laboratories, radiochemical pilot plants, and nuclear reactors located in both Bethel and Melton valleys. The waste is concentrated in the evaporators and transferred to the MVSTs for holding. From that point, the waste can be directed through one of three paths or in some combination of the Cesium Removal System, the Out of Tank Evaporator System, or the LLLW Solidification System.

The wastes involved contain fissionable nuclides (such as ^{233}U, ^{235}U, and $^{239\text{-}241}$P) and are therefore mixed with nonfissionable materials (e.g., ^{238}U, ^{232}Th).

LLLW Solidification Facility — The ORNL Waste Management and Remedial Action Division (WMRAD) LLLW Solidification Facility , Building 7877, houses operations to solidify the supernatant in the MVSTs. In general, each tank contains a soft crusty sludge covered by an alkaline, high-nitrate supernatant of variable volume. Both the sludge and supernatant contain Alpha- and beta-gamma-emitting radionuclides. The purpose of the solidification operations is to reduce the volume of LLLW stored in the MVSTs to provide storage volume for more waste. Previously, the wastes from the MVSTs were mixed with grout and injected into the ground at the Hydrofracture Facility. However, this method is no longer an acceptable course of action.

Out of Tank Evaporator System — The Out of Tank Evaporation method uses a single effect, shell and tube, vacuum evaporator unit installed in one-half of the bay area of Building 7877, to

concentrate the supernatant from the MVSTs. The main components of the system include a feed tank, concentrate/recycle tank, distillate tank, evaporator, separator, condenser, heating and cooling systems, and local and remote control panels.

The GAAT are all inactive and therefore have no major waste streams. When the GAAT Treatability Study is underway, the LLLW and sludges associated with the tanks will be transferred to the MVSTs for storage and eventual handling through the LLLW System. GAAT contents are stored wastes from ORNL operations (e.g., Building 3019) and include chemical process waste, high radioactive metals, and fissionable materials (e.g., tritium and various isotopes of cesium, plutonium, uranium, and neptunium).

Section Review

1. *Identify the current defense nuclear facilities at ORNL.*

2. *How has the mission changed over recent years for the ORNL defense nuclear facilities?*

3. *Summarize the process overviews for:*
   - *Bldg. 3019*
   - *MVSTs*
   - *Gunite tanks*

   Include a sketch of the LLLW System to clarify your explanation.

4. *What are the hazards to the workers and general public from these facilities?*

5. *Characterize the ORNL defense nuclear facility waste stream in regards to the composition. How is this waste treated?*