**Oak Ridge Operations Office**
**Training and Development Group**

# Facility Representative Qualification Exam Study Guide

## 2nd Edition

**December 1998**

# Table of Contents

**Page**

**A. Introduction** . . . . . vii

1. Purpose . . . . . vii
2. How to Use This Study Guide . . . . . vii

**B. Responsibility Area 1.0 - General Technical** . . . . . 1

Competency 1.1: A Facility Representative shall demonstrate a familiarity level knowledge of principles of steam system operation including theory, components, startup, normal and off-normal operation, and shutdown.

1. Supporting Knowledge and Skills . . . . . 1
2. References . . . . . 4

Competency 1.2: Personnel shall demonstrate familiarity level knowledge of basic pneumatic and hydraulic systems in the areas of components, operations, and theory.

1. Supporting Knowledge and Skills . . . . . 5
2. References . . . . . 6

Competency 1.3: Personnel shall demonstrate familiarity level knowledge of heat exchanger construction, operations, and theory.

1. Supporting Knowledge and Skills . . . . . 7
2. References . . . . . 7

Competency 1.4: Personnel shall demonstrate familiarity level knowledge of pump construction, operations, and theory.

1. Supporting Knowledge and Skills . . . . . 8
2. References . . . . . 9

Competency 1.5: Personnel shall demonstrate familiarity level knowledge of valve construction, operations, and theory.

1. Supporting Knowledge and Skills . . . . . 10
2. References . . . . . 11

Table of Contents

**Page**

Competency 1.6: Personnel shall demonstrate familiarity level knowledge of basic air compressor, strainer, and filter construction, operations, and theory.

1. Supporting Knowledge and Skills . . . . . 12
2. References . . . . . 12

Competency 1.7: Personnel shall demonstrate familiarity level knowledge of basic heating, ventilation, and air conditioning system construction, operations, and theory.

1. Supporting Knowledge and Skills . . . . . 13
2. References . . . . . 13

Competency 1.8: Personnel shall demonstrate familiarity level knowledge of basic electrical fundamentals in the areas of terminology and theory.

1. Supporting Knowledge and Skills . . . . . 14
2. References . . . . . 15

Competency 1.9: Personnel shall demonstrate familiarity level knowledge of basic electrical fundamentals in the area of direct current (DC).

1. Supporting Knowledge and Skills . . . . . 16
2. References . . . . . 18

Competency 1.10: Personnel shall demonstrate familiarity level knowledge of basic electrical fundamentals in the area of alternating current (AC).

1. Supporting Knowledge and Skills . . . . . 19
2. References . . . . . 19

Competency 1.11: Personnel shall demonstrate working level knowledge of basic electrical fundamentals in the area of electrical distribution systems.

1. Supporting Knowledge and Skills . . . . . 20
2. References . . . . . 20

Competency 1.12: Personnel shall demonstrate familiarity level knowledge of process instrumentation principles of operation, purpose and uses.

1. Supporting Knowledge and Skills . . . . . 21
2. References . . . . . 22

Table of Contents

**Page**

Competency 1.13: Personnel shall demonstrate familiarity level knowledge of control system principles of operation and uses.

1. Supporting Knowledge and Skills . . . . . 23
2. References . . . . . 24

Competency 1.14: Personnel shall demonstrate familiarity level knowledge of chemistry fundamentals in the areas of theory and the periodic table.

1. Supporting Knowledge and Skills . . . . . 25
2. References . . . . . 26

Competency 1.15: Personnel shall demonstrate familiarity level knowledge of chemistry fundamentals in the areas of chemical bonding and chemical reactions.

1. Supporting Knowledge and Skills . . . . . 27
2. References . . . . . 27

Competency 1.16: Personnel shall demonstrate familiarity level knowledge of chemistry fundamentals in the areas of corrosion and water treatment.

1. Supporting Knowledge and Skills . . . . . 28
2. References . . . . . 31

Competency 1.17: Personnel shall demonstrate working level knowledge of chemistry fundamentals in the area of safety.

1. Supporting Knowledge and Skills . . . . . 32
2. References . . . . . 36

Competency 1.18: Personnel shall demonstrate familiarity level knowledge of basic thermodynamics concepts and theories.

1. Supporting Knowledge and Skills . . . . . 37
2. References . . . . . 39

Competency 1.19: Personnel shall demonstrate familiarity level knowledge of basic heat transfer and fluid flow concepts and theories.

1. Supporting Knowledge and Skills . . . . . 40

Table of Contents

**Page**

2. References . . . . . 41

Competency 1.20: Personnel shall demonstrate familiarity level knowledge of basic material science in the areas of concepts, theories, and principles.

1. Supporting Knowledge and Skills . . . . . 42
2. References . . . . . 46

Competency 1.21: Personnel shall demonstrate a working level knowledge of engineering prints and drawings.

1. Supporting Knowledge and Skills . . . . . 47
2. References . . . . . 49

Competency 1.22: Personnel shall demonstrate a working level knowledge of electrical prints, diagrams and schematics.

Competency 1.23: Personnel shall demonstrate a working level knowledge of electronic/logic block diagrams, prints, and schematics.

1. Supporting Knowledge and Skills . . . . . 50
2. References . . . . . 51

Competency 1.24: Personnel shall demonstrate a working level knowledge of engineering fabrication, construction, and architectural drawings.

1. Supporting Knowledge and Skills . . . . . 52
2. References . . . . . 52

**C. Responsibility Area 2.0 - Regulatory**

Competency 2.1: A Facility Representative shall demonstrate a working level knowledge of the purpose, scope, and application of applicable DOE Orders.

1. Supporting Knowledge and Skills . . . . . 53
2. References . . . . . 88

Table of Contents

**Page**

**D. Responsibility Area 3.0 - Administrative**

Competency 3.1: A Facility Representative shall demonstrate a working level knowledge of the Department of Energy/facility contract provisions necessary to provide oversight of the operating contractor operations.

1. Supporting Knowledge and Skills . . . . . 91
2. References . . . . . 93

Competency 3.2: A Facility Representative shall demonstrate a familiarity level knowledge of the training and qualification requirements for nuclear facility operations personnel.

1. Supporting Knowledge and Skills . . . . . 94
2. References . . . . . 95

**E. Responsibility Area 4.0 - Management, Inspection, and Oversight**

Competency 4.1: A Facility Representative shall demonstrate a working level knowledge of problem analysis principles and techniques necessary to identify problems, determine potential causes of the problems, and identify corrective action(s).

1. Supporting Knowledge and Skills . . . . . 96
2. References . . . . . 102

Competency 4.2: A Facility Representative shall demonstrate a working knowledge of assessment techniques such as the planning and use of observations, interviews, and document reviews to assess facility performance, report results of assessments, and follow up on actions taken as the result of assessments.

1. Supporting Knowledge and Skills . . . . . 103
2. References . . . . . 105

Competency 4.3: A Facility Representative shall demonstrate a working level knowledge of the Department of Energy emergency management system and response practices.

1. Supporting Knowledge and Skills . . . . . 106
2. References . . . . . 111

Table of Contents

**Page**

Competency 4.4: A Facility Representative shall demonstrate a familiarity level knowledge of applicable DOE Orders sufficient to conduct independent assessment of contractor and/or Federal employee work activities.

1. Supporting Knowledge and Skills . . . . . 112
2. References . . . . . 115

Competency 4.5: A Facility Representative shall demonstrate a working level knowledge of Conduct of Maintenance principles and Department of Energy requirements to ensure maintenance is performed in a safe and efficient manner.

1. Supporting Knowledge and Skills . . . . . 116
2. References . . . . . 120

Competency 4.6: A Facility Representative shall demonstrate a working level knowledge of the Occurrence Reporting and Processing System necessary to ensure that occurrences are properly reported and processed in accordance with DOE Order 5000.3B, *Occurrence Reporting and Processing of Operations Information*.

1. Supporting Knowledge and Skills . . . . . 121
2. References . . . . . 124

## Introduction

1. Purpose

   The purpose of this study guide is to provide you with information to help you acquire the Facility Representative Qualification Program supporting knowledge and skills as reflected in the DOE Facility Representative Qualification Standard. The guide will list the competency, the supporting knowledge and skills, and information in the form of sentence(s), paragraph(s), and/or question(s) and preferred response(s). Preferred responses to these supporting knowledge and skills for a given responsibility area and competency are provided along with the associated references. Although references are listed, all essential information is contained within the guide.

2. How to Use This Study Guide

   a. For each responsibility area, review the supporting knowledge and skills for the given competency.

   b. Without looking at the preferred response, try to answer or respond to the stated knowledge and/or skill.

   c. Compare your verbal or written response to the preferred response.

   d. As necessary, correct your response.

   e. Re-read the supporting knowledge and/or skill, followed immediately with the preferred response.

   f. As you need to, refer to the associated references containing additional information about the competency and supporting knowledge and skills.

**Responsibility Area 1.0 - General Technical**

Competency 1.1: A Facility Representative shall demonstrate a familiarity level knowledge of principles of steam system operation including theory, components, startup, normal and off-normal operation, and shutdown.

1. Supporting Knowledge and Skills

   a. Describe the application of the following concepts to steam systems: enthalpy, saturation, superheat, steam quality, moisture content, condensation, sensible heat, carryover, thermal expansion, and thermal contraction.

      Background: *Specific enthalpy* (h) is defined as h = u + P*v*, where u is the specific internal energy (Btu/lbm) of the system being studied, P is the pressure of the system (lbf/ft$^2$), and *v* is the specific volume (ft$^3$/lbm) of the system. Enthalpy is usually used in connection with an "open" system problem in thermodynamics. Enthalpy is a property of a substance, like pressure, temperature, and volume, but it cannot be measured directly. Normally, the enthalpy of a substance is given with respect to some reference value. For example, the specific enthalpy of water or steam is given using the reference that the specific enthalpy of water is zero at .01$^o$C and normal atmospheric pressure. The fact that the absolute value of specific enthalpy is unknown is not a problem, however, because it is the change in specific enthalpy ( $^a$h) and not the absolute value that is important in practical problems. Steam tables include values of enthalpy as part of the information tabulated.

      Question: The term "specific enthalpy"can be defined as:

      Preferred Response: The total energy, due to both temperature and pressure of a fluid at a given time and condition. (Ref: DOE-HDBK-1012-92)

   b. Explain the function/application of the following steam system components and describe how the components contribute to steam system operation:
      - Isolation Valves
      - Isolation Valve Bypass Valves
      - Vent Valves
      - Drain Valves
      - Safety/Relief Valves
      - Flow Control Valves
      - Steam Trap Bypass Valves
      - Expansion Joints
      - Pressure Control Valves
      - Moisture Separators
      - Pipe Hangers/Supports
      - Condensers

- Steam Generators/Reboilers
- Turbines
- Flash Tanks
- Steam Traps (mechanical, impulse, thermostatic)

Background: Water and steam hammer are not uncommon occurrences in industrial plants. Flow changes in piping systems should be done slowly as part of good operator practice. To prevent water and steam hammer, operators should ensure liquid systems are properly vented and ensure gaseous or steam systems are properly drained during start-up. When possible, initiate pump starts against a closed discharge valve, and open the discharge valve slowly to initiate system flow. If possible, start up smaller capacity pumps before larger capacity pumps. Use warm-up valves around main stream stop valves whenever possible. If possible, close pump discharge valves before stopping pumps. Periodically verify proper function of moisture traps and air traps during operation.

Question: To reduce the possibility of having a steam/water hammer condition initiate in a steam system, one method for eliminating the condensate buildup is to use which of the following devices?

Preferred Response: moisture/steam trap (Ref: DOE-HDBK-1012-92)

c. Be able to identify the functional representation of the following steam system components:
- Steam Valves
- Centrifugal/Positive Displacement pumps
- Pressure Instrumentation
- Temperature Instrumentation

Background:

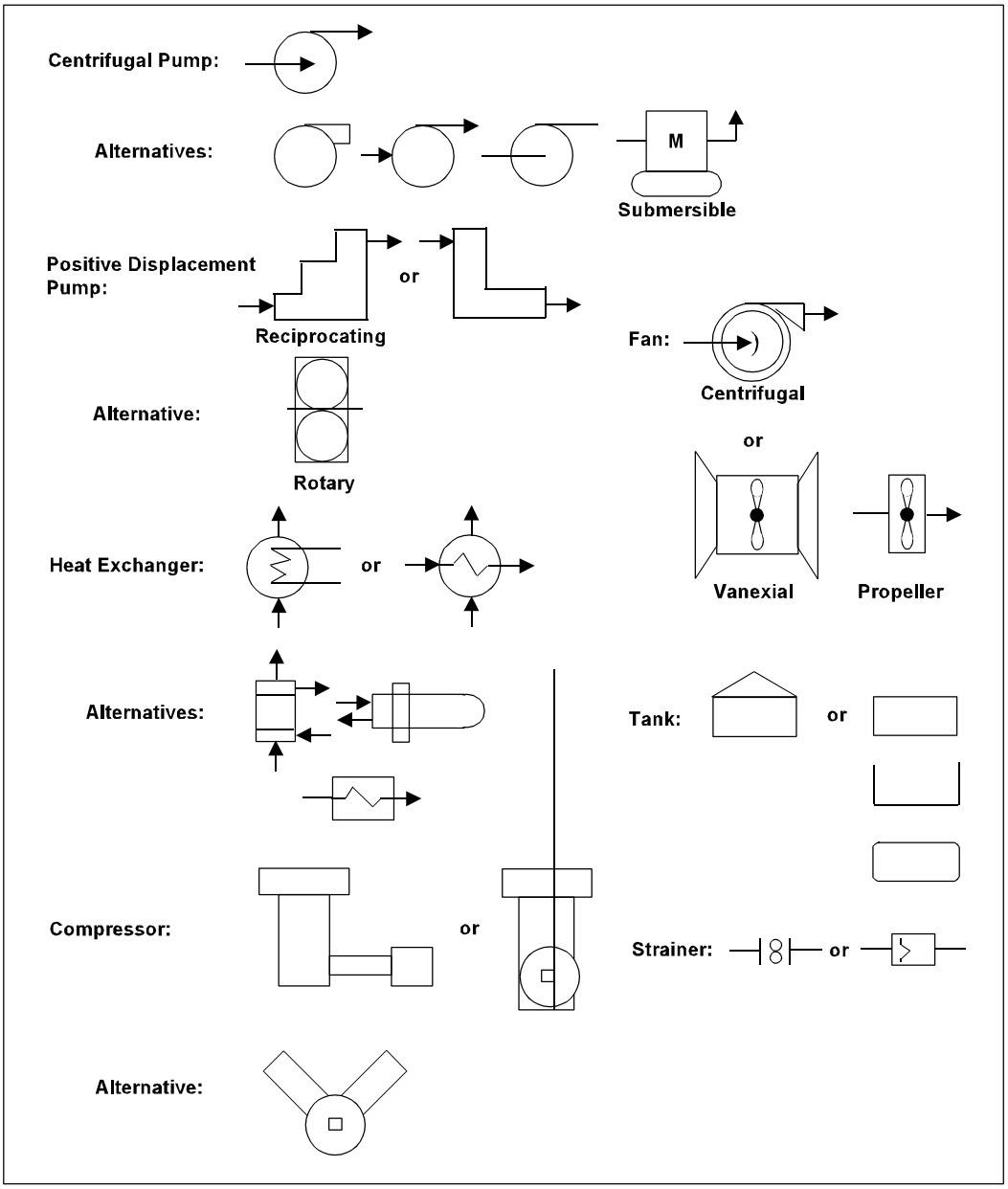
Centrifugal Pump:
Alternatives:
M
Submersible
Positive Displacement Pump:
or
Reciprocating
Fan:
Centrifugal
Alternative:
Rotary
or
Heat Exchanger:
or
Vanexial
Propeller
Alternatives:
Tank:
or
Compressor:
or
Strainer:
or
Alternative:

Question: Match the following drawing representations with their correct steam system functional name.

A - 1 - steam isolation valve

B - 2 - pressure indicating device

C - 3 - centrifugal pump

D - 4 - temperature indicating device

Preferred Response: A - 2, B - 3, C - 1, D - 4 (Ref: DOE-HDBK-1012-92)

2. References

   a. DOE-HDBK-1012-92, *DOE Fundamentals Handbook - Thermodynamics, Heat Transfer, and Fluid Flow*, Volumes 1 and 3.

Competency 1.2: Personnel shall demonstrate familiarity level knowledge of basic pneumatic and hydraulic systems in the areas of components, operations, and theory.

1. Knowledge and Skills

   a. Identify the hazards associated with pneumatic and hydraulic systems and their components.

      Background: Air compressors of various designs are used widely throughout DOE facilities in numerous applications. Compressed air has numerous uses throughout a facility, including the operation of equipment and portable tools. Three types of designs include reciprocating, rotary, and centrifugal air compressors.

      People often lack respect for the power in compressed air because air is so common and is often viewed as harmless. At sufficient pressures, compressed air can cause serious damage if handled incorrectly. To minimize the hazards of working with air, all safety precautions should be followed closely.

      Small leaks or breaks in the compressed air system can cause minute particles to be blown at extremely high speeds. Always wear safety glasses when working in the vicinity of any compressed air system. Safety goggles are recommended if contact lenses are worn.

      Pressurized air can do the same type of damage as pressurized water. Treat all operations on compressed sir systems with the same care as taken with liquid systems. Closed valves should be opened slowly, and both sides should be allowed to equalize prior to opening the valve further. Systems being opened for maintenance should always be depressurized before work begins.

      In liquid-based systems, any liquid can be used, although some liquids have advantages over others. Oil is a liquid often preferred as the working fluid. Oil helps to lubricate the various sliding parts, prevents rust, and is readily available. For practical purposes, oil does not change its volume in the hydraulic system when the pressure is changed.

      The foundation of hydraulics is Pascal's Law, which states that pressure in a fluid acts equally in all directions. The application of this law requires an understanding of the relationship between force and pressure.

      Force may be defined as a push or pull exerted against the total area of a surface. It is expressed in pounds. Pressure is the amount of force on a unit area of the surface. That is, pressure is the force acting upon one square inch of a surface.

Expressed mathematically, F = P x A

where:
F = force in lbf
P = pressure in $lbf/in^2$
A = area in $in^2$

The hazards and precautions observed in pneumatics are applicable in hydraulics, too, because they are associated with high pressure. Any use of a pressurized medium can be dangerous. Hydraulic systems carry special hazards that are related directly to the composition of the fluid used. (Ref: DOE-HDBK-1018-93)

Question: What is the advantage of having a cooling system on compressed air generation systems?

Preferred Response: Provides cool air that takes up less space and holds less moisture, which reduces corrosion and allows more air to be compressed into the same volume.
(Ref: DOE-HDBK-1018-93)

2. References

a. DOE-HDBK-1018-93, *DOE Fundamentals Handbook - Mechanical Science*, Volumes 2 and 5.

Competency 1.3: Personnel shall demonstrate familiarity level knowledge of heat exchanger construction, operations, and theory.

1. Supporting Knowledge and Skills

   a. Describe the two types of heat exchanger construction.

      Background: Although ordinary heat exchangers may be extremely different in design and construction and may be of the single- or two-phase type, their modes of operation and effectiveness are largely determined by the direction of the fluid flow within the exchanger.

      The most common arrangements for flow paths within a heat exchanger are counter-flow and parallel flow. A counter-flow heat exchanger is one in which the direction of the flow of one of the working fluids is opposite to the direction to the flow of the other fluid. In a parallel flow exchanger, both fluids in the heat exchanger flow in the same direction. Under comparable conditions, more heat is transferred in a counter-flow arrangement than in a parallel-flow heat exchanger.

      Question: There are two types of heat exchangers used in industrial application today; these are called:

      Preferred Response: Counter-flow and parallel-flow. (Ref: DOE-HDBK-1012-92)

2. References

   a. DOE-HDBK-1012-92, *DOE Fundamentals Handbook - Thermodynamics, Heat Transfer, and Fluid Flow*, Volume 2.

Competency 1.4: Personnel shall demonstrate familiarity level knowledge of pump construction, operations, and theory.

1. Supporting Knowledge and Skills

   a. Describe the principle of operation for
      - Centrifugal pumps
      - Positive displacement pumps

      Background: Centrifugal pumps are the most common type of pumps found in DOE facilities. Centrifugal pumps enjoy widespread application partly due to their ability to operate over a wide range of flow rates and pump heads.

      Centrifugal pumps basically consist of a stationary pump casing and an impeller mounted on a rotating shaft. The pump casing provides a pressure boundary for the pump and contains channels to properly direct the suction and discharge flow. The pump casing has suction and discharge penetrations for the main flow path of the pump and normally has small drain and vent fittings to remove gases trapped in the pump casing or to drain the pump casing for maintenance. The pump casing guides the liquid from the suction connection to the center, or eye, of the impeller. The vanes of the rotating impeller impart a radial and rotary motion to the liquid, forcing it to the outer periphery of the pump casing where it is collected in the outer part of the pump casing called the volute. The volute is a region that expands in cross-sectional area as it wraps around the pump casing. The purpose of the volute is to collect the liquid discharged from the periphery of the impeller at high velocity and gradually cause a reduction in fluid velocity by increasing the flow area. This converts the velocity head to static pressure. The fluid is then discharged from the pump through the discharge connection.

      Positive displacement pumps operate on a different principle than centrifugal pumps. Positive displacement pumps physically entrap a quantity of liquid at the suction of the pump and push that quantity out the discharge of the pump.

      A positive displacement pump is one in which a definite volume of liquid is delivered for each cycle of pump operation. This volume is constant regardless of the resistance to flow offered by the system the pump is in, provided the capacity of the power unit driving the pump or pump component strength limits are not exceeded. The positive displacement pump delivers liquid in separate volumes with no delivery in between, although a pump having several chambers may have an overlapping delivery among individual chambers, which minimizes this effect. The positive displacement pump differs from centrifugal pumps, which deliver a continuous flow for any given pump speed and discharge resistance. Positive displacement pumps can be grouped into three basic categories based on their design and operation. The three groups are reciprocating pumps, rotary pumps, and diaphragm pumps.

Question: Given the following diagram, identify the following components: manual isolation valve, condenser, pressure gauge, and centrifugal pump.

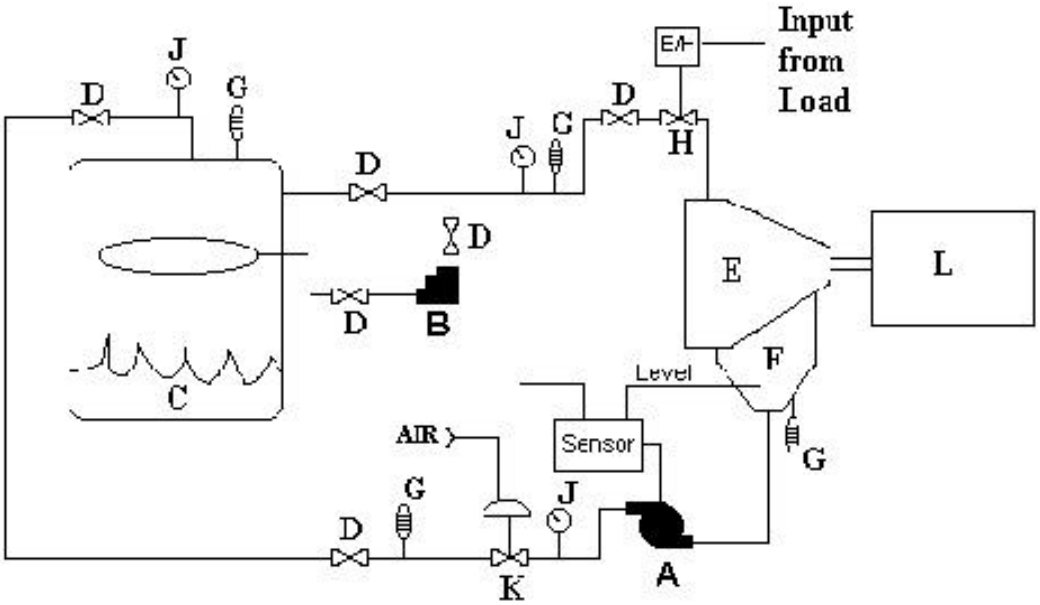


Preferred Response: D = manual isolation valve, F = condenser, J = pressure gauge, A = centrifugal pump (Ref: DOE-HDBK-1012-92)

2. References

   a. DOE-HDBK-1012-92, *DOE Fundamentals Handbook - Thermodynamics, Heat Transfer, and Fluid Flow*, Volume 2, various modules and sections.

Competency 1.5: Personnel shall demonstrate familiarity level knowledge of valve construction, operations, and theory.

1. Supporting Knowledge and Skills

   a. Given a drawing of a valve, identify the component parts.

   Background: Valves are the most common single piece of equipment found in DOE facilities. Although there are many types, shapes, and sizes of valves, they all have the same basic parts. This chapter will review the common parts and functions of a valve.

   A valve is a mechanical device that controls the flow of fluid and pressure within a system or process. A valve controls system or process fluid flow and pressure by performing any of the following functions:

   - Stopping and starting fluid flow
   - Varying (throttling) the amount of fluid flow
   - Controlling the direction of fluid flow
   - Regulating downstream system or process pressure
   - Relieving component or piping over pressure

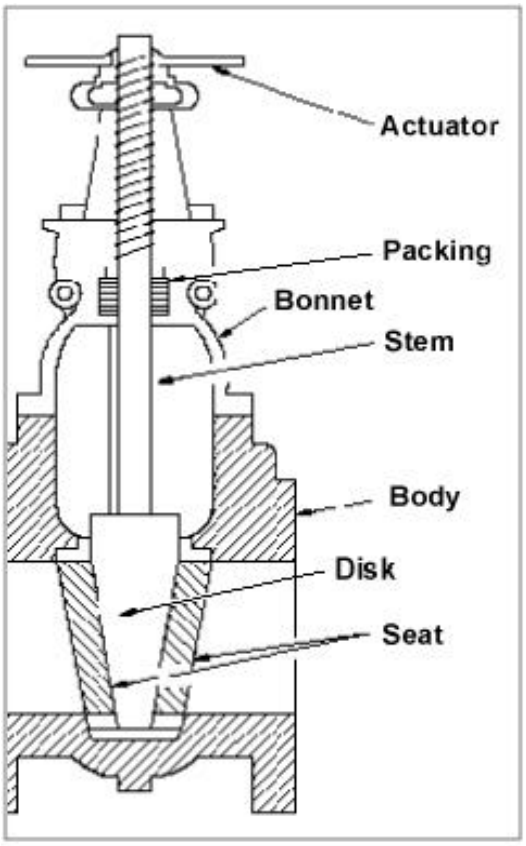


There are many valve designs and types that satisfy one or more of the functions identified above. A multitude of valve types and designs safely accommodate a wide variety of industrial applications. Regardless of type, all valves have the following basic parts: the body, bonnet, trim (internal elements), actuator, and packing. The basic parts of a valve are illustrated in the figure to the left.
(Ref: DOE-HDBK-1018-93)

Question: For each of the representative valve drawings below, choose the correct name from the list below.

A. Solenoid operated valve _____ 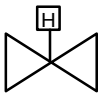


B. Check valve _____ 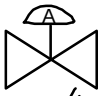


C. Hydraulic operated valve

D. Manual operated valve _____ 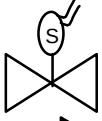


E. Air operated valve _____

F. Rising stem valve _____

Preferred Response: C, E, A, B, D (Ref: DOE-HDBK-1016-93)

2. References

a. DOE-HDBK-1018-93, *DOE Fundamentals Handbook - Mechanical Science*, Volume 2.

b. DOE-HDBK-1016-93, *DOE Fundamentals Handbook - Engineering, Symbology, Prints and Drawings*, Volume 1, Module 2.

Competency 1.6: Personnel shall demonstrate familiarity level knowledge of basic air compressor, strainer, and filter construction, operations, and theory.

1. Supporting Knowledge and Skills

   a. Describe the basic operation of an air compressor.

      Background: Compressor Coolers - The amount of moisture that air can hold is inversely proportional to the pressure of the air. As the pressure of the air increases, the amount of moisture that air can hold decreases. The amount of moisture that air can hold is also proportional to the temperature of the air. As the temperature of the air increases, the amount of moisture it can hold increases. However, the pressure change of compressed air is larger than the temperature change of the compressed air. This causes the moisture in the air to condense. Moisture in compressed air systems can cause serious damage. The condensed moisture can cause corrosion, water hammers, and freeze damage; therefore, it is important to avoid moisture in compressed air systems. Coolers are used to minimize the problems caused by heat and moisture in compressed air systems.

      Question: The advantage of having a cooling system on compressed air generation systems is that it:

      Preferred Response: Provides cool air that takes up less space and holds less moisture, which reduces corrosion and allows more air to be compressed into the same volume.
      (Ref: DOE-HDBK-1018-93)

      Question: On a particular round of the facility, the operator notices that the operating temperature of an air compressor is slightly out of the normal operating band provided on the Round Inspection Sheet. What is the proper operator response?

      Preferred Response: Document the out-of-tolerance temperature on the Round Inspection Sheet, circle or highlight the out-of-tolerance value, and report the condition to the supervisor. (Ref: DOE Order 5480.19)

2. References

   a. DOE-HDBK-1018-93, *DOE Fundamental Handbook - Mechanical Science*, Volume 2, Module 5.

   b. DOE Order 5480.19, *Conduct of Operations Requirements for DOE Facilities*, Attachment I, Chapter II.C.4.

Competency 1.7: Personnel shall demonstrate familiarity level knowledge of basic heating, ventilation, and air conditioning system construction, operations, and theory.

1. Supporting Knowledge and Skills

   a. Discuss the relationship between the following in HVAC systems:
      - Supply ventilation
      - Flow
      - Exhaust ventilation

      Background: From 29 CFR 1910.94(a)(4)(I)(b)

      The static pressure drop at the exhaust ducts leading from the equipment shall be checked when the installation is completed and periodically thereafter to assure continued satisfactory operation. Whenever an appreciable change in the pressure drop indicates a partial blockage, the system shall be cleaned and returned to normal operating condition.

      In installations where the abrasive is recirculated, the exhaust ventilation system for the blasting enclosure shall not be relied upon for the removal of fines from the spent abrasive instead of an abrasive separator. An abrasive separator shall be provided for the purpose.

      The air exhausted from blast-cleaning equipment shall be discharged through dust collecting equipment. Dust collectors shall be set up so that the accumulated dust can be emptied and removed without contaminating other working areas.

      Question: Which of the following methods is preferred for controlling inhalation of grinding wheel dust?

      Preferred Response: Local exhaust system. (Ref: 29 CFR 1910.94)

2. References

   a. 29 CFR 1910.94, “Occupational Safety and Health Standards.”

Competency 1.8: Personnel shall demonstrate familiarity level knowledge of basic electrical fundamentals in the areas of terminology and theory.

1. Supporting Knowledge and Skills

   a. Discuss the following terms:
      - Electrostatic force
      - Electrostatic field
      - Conductor
      - Static electricity
      - Insulator
      - Resistor

   Background: Atoms with the proper number of electrons in orbit around them are in a neutral state, or have a "zero charge." A body of matter consisting of these atoms will neither attract nor repel other matter that is in its vicinity. If electrons are removed from the atoms in this body of matter, as happens due to friction when one rubs a glass rod with a silk cloth, it will become electrically positive. If this body of matter (e.g., glass rod) comes near, but not in contact with, another body having a normal charge, an electric force is exerted between them because of their unequal charges. The existence of this force is referred to as *static electricity* or *electrostatic force*.

   Question: Describe a method of producing static electricity?

   Preferred Response: A neutrally charged object loses electrons, due to friction, and comes near another object having a neutral charge. (Ref: DOE-HDBK-1011-92)

   Question: What condition is most likely to have static electricity present?

   Preferred Response: Low-humidity. (Ref: 29 CFR 1910, Subpart S and NFPA 70)

   Question: Describe the relationship of current and resistance in the production of a fatal current.

   Preferred Response: The minimum amount of electric current passing through the body to produce a fatality is 70-100 ma. With a voltage of 110 v AC, what is the body resistance that will allow the minimum current to flow?

   Using the basic formula of I = E/R, solve for R.

   R = E/I and
   $R_{body}$ = 110 v / 70 x $10^{-3}$ ma = $1.571 \times 10^{3}$S or ~ 1.5 KS

   Many conditions can affect this resistance including humidity, moisture on the hands/body, and safety equipment (mats, gloves, etc.). (Ref: DOE-HDBK-1011-92)

Background: A fundamental rule of electricity is that electric current returns to its source. It does so by finding any path for current flow, like through the body to the ground and back to the source. And in doing so, it may create sparks. In order to minimize sparking, equipment should be grounded to the nearest ground as well as the other pieces of equipment in close proximity to each other. (Ref: NFPA 70, *National Electrical Code*)

Question: When transferring an extremely flammable liquid from a 55-gallon drum via a hand pump to a small metal safety can, what action provides the best protection?

Preferred Response: Ground each container to a single low-resistance ground and then electrically bond them to each other. (Ref: 29 CFR 1910.106.)

Question: While on a tour of your facility, you notice that some rigid metal conduit is warm to the touch. What do you suspect?

Preferred Response: There is a short in the system causing excess current flow, creating the heat. (Ref: DOE-HDBK-1011-92)

2. References

   a. DOE-HDBK-1011-92, *DOE Fundamental Handbook - Electrical Science*, Volume 1.

   b. 29 CFR 1910, Subpart S, "Occupational Safety and Health Standards."

   c. NFPA 70, *National Electrical Code*..

   d. 29 CFR 1910.106, "Occupational Safety and Health Standards."

Competency 1.9: Personnel shall demonstrate familiarity level knowledge of basic electrical fundamentals in the area of direct current (DC).

1. Supporting Knowledge and Skills

   a. Describe the hazards associated with lead-acid storage batteries.

      Background: Cell short circuits can be caused by several conditions, which include the following: faulty separators; lead particles or other metals forming a circuit between the positive and negative plates; buckling of the plates; or excessive sediments in the bottom of the jar. The primary cause of some of these occurrences is overcharging and over discharging of the battery, which causes sediment to build up due to flaking of active material and buckling of cell plates.

      Overcharging and over discharging should be avoided at all costs. Short circuits cause a great reduction in battery capacity. With each shorted cell, battery capacity is reduced by a percentage equal to one over the total number of cells. A lead-acid battery cannot absorb all the energy from the charging source when the battery is nearing the completion of the charge. This excess energy dissociates water by way of electrolysis into hydrogen and oxygen. Oxygen is produced by the positive plate, and hydrogen is produced by the negative plate. This process is known as gassing.

      Gassing is first noticed when cell voltage reaches 2.30 - 2.35 volts per cell and increases as the charge progresses. At full charge, the amount of hydrogen produced is about one cubic foot per cell for each 63 ampere-hours input. If gassing occurs and the gases are allowed to collect, an explosive mixture of hydrogen and oxygen can be readily produced. It is necessary, therefore, to ensure that the area is well ventilated and that it remains free of any open flames or spark-producing equipment. As long as battery voltage is greater than 2.30 volts per cell, gassing will occur and cannot be prevented entirely. To reduce the amount of gassing, charging voltages above 2.30 volts per cell should be minimized.

      Question: One of the hazards associated with lead-acid batteries is a process called “gassing.” What precaution should be taken to minimize “gassing?”

      Preferred Response: Keeping the charging voltage below 2.3 volts per cell.
      (Ref: DOE-HDBK-1011-92)

   b. Explain the types of protection afforded by the following:
      - Fuses
      - Grounding devices
      - Circuit breakers
      - Overcurrent devices

Background: Ohm's Law states that there is a definite relationship between voltage, current, and resistance in an electrical circuit. Ohm's Law defines this relationship and can be stated in three ways.

1. Applied voltage equals circuit current times the circuit resistance. The following is a mathematical representation of this concept.

   $E = I \times R$ or $E = IR$

2. Current is equal to the applied voltage divided by the circuit resistance. The following equation is a mathematical representation of this concept.

   $I = E/R$

3. Resistance of a circuit is equal to the applied voltage divided by the circuit current. The following equation is a mathematical representation of this concept.

   R (or S) = E/I

   where
   I = current (A)
   E = voltage (V)
   R = resistance (S)

If any two of the component values are known, the third can be calculated.

Background: Fuses and circuit breakers are overcurrent devices used in electric circuits to protect the equipment (along with grounding devices). They are designed to "open" when the current gets above a certain level, usually 125% of the circuit design capacity. Commonly used circuit breaker devices utilize overcurrent, undervoltage, or high frequency variations as automatic trip features. Fuses are not resettable or reusable but circuit breakers can be reset after a period of time.

EXAMPLE: A laborer is using a 600-watt hand tool. Another laborer plugs a second 600-watt hand tool into the same receptacle. Assuming no additional devices are being utilized on the 110-volt circuit, the minimum size overcurrent protection device (fuse, circuit breaker) required is _____ amps. Remember, do not exceed 80% of the overcurrent device.

Using the basic electricity formula for power P=IE, where P = 1200w and E = 110v, calculate the I for above.

$I = P/E = 600w + 600w / 110v = 10.9$ amps or 11 amps

If we are to operate the hand tools, the minimum size protective device would probably be a 15 amp fuse or circuit breaker (because they are usually sized in 10, 15, 20, 25, etc.)

Another type of protective device is a Ground Fault Circuit Interrupt device. It is designed to "open" whenever there is any leakage current between the "hot" or load wires and ground or the neutral wires. If it detects ANY leakage current, the circuit will open and must be reset.
(Ref: DOE-HDBK- 1011-92)

2. References

   a. DOE-HDBK-1011-92, *DOE Fundamentals Handbook - Electrical Science*, Volumes 2 and 4.

   b. 29 CFR 1910.399, "Occupational Safety and Health Standards."

Competency 1.10: Personnel shall demonstrate familiarity level knowledge of basic electrical fundamentals in the area of alternating current (AC).

1. Supporting Knowledge and Skills

   a. Given a workplace situation involving the use of electrical equipment, identify applicable standards using 29 CFR 1910 Subpart S to determine if the situation is in compliance and explain the appropriate corrective measures.

      Scenario: You are observing some high-voltage (over 600 volts) work being performed. The work crew plans to trace and mark cables in the cable vault/room through the cable trays and building room-wall penetrations. During the work activity, you hear one of the workers tell the crew leader that there is some type of liquid dripping in the wall penetration.

      Question: What action would you expect the work crew to take at this point?

      Preferred Response: Terminate work and call the supervisor to investigate the liquid.
      (Ref: NFPA 70 and 29 CFR 1910, Subpart S)

2. References

   a. NFPA 70, *National Electrical Code*.

   b. 29 CFR 1910, Subpart S, "Occupational Safety and Health Standards."

Competency 1.11: Personnel shall demonstrate working level knowledge of basic electrical fundamentals in the area of electrical distribution systems.

1. Supporting Knowledge and Skills

   a. The Occupational Safety and Health Administration's (OSHA's) Electrical Safety-Related Work Practices Standard requires employers to:
      - identify and differentiate between qualified and unqualified employees
      - provide training and personal protective equipment to those workers who must work on or near live energized circuits that are rated 50 volts or more
      - maintain a written program that clearly explains which type of circuits must be shut down before work is performed on or near them [Ref: 29 CFR 1926.417(d)(2)(2)I and 29 CFR 1910.332(b)(3)]

      Sufficient access and working space in the direction of access to live parts operating at 600 volts or less shall be provided and maintained about all electrical equipment to permit ready and safe operation and maintenance of such equipment. The minimum clear distance for installations built after April 16, 1981, is 36 inches, according to OSHA Standards set forth in 29 CFR 1910.303(9).

      Should it become necessary to open an energized electrical equipment cabinet and work inside it, the technician should isolate the equipment from energy sources. [Ref: 29 CFR 1910.333(a)(1)]

      When working on energized circuits, OSHA specifies the type of protection that is required. Protection in the form of insulated tools and insulated protective equipment, such as gloves, blankets, sleeves, mats, etc., shall be used while working on energized circuits. It is recommended that rubber gloves be worn, with leather outer gloves worn over them, to prevent tearing. [Ref: 29 CFR 1910.137, 29 CFR 1910.335(a)(iii)]

2. References

   a. 29 CFR 1926.417(d)(2)(2)I, "Safety and Health Regulations for Construction."

   b. 29 CFR 1910.332(b)(3), 1910.333(a)(1), 1910.335(a)(iii), and 1910.137, "Occupational Safety and Health Standards."

Competency 1.12: Personnel shall demonstrate familiarity level knowledge of process instrumentation principles of operation, purpose and uses.

1. Supporting Knowledge and Skills

   a. For the pressure detection devices listed, explain how the instrument provides an output representative of the level being measured.

      Background: The need for a pressure-sensing element that was extremely sensitive to low pressures and provided power for activating recording and indicating mechanisms resulted in the development of the metallic bellows pressure-sensing element. The metallic bellows is most accurate when measuring pressures from 0.5 to 75 psig. However, when used in conjunction with a heavy range spring, some bellows can be used to measure pressures of over 1000 psig.

      Question: Which of the following detectors is more sensitive to low pressures?
      a) Bellows Type Detector
      b) Bourdon Tube Type Detector
      c) Differential Pressure Detector
      d) Conductivity Probe Detector

      Preferred Response: a) Bellows Type Detector. (Ref: DOE-HDBK-1013-92)

   b. Background: Functions of Detectors - Although the temperatures that are monitored vary slightly depending on the details of facility design, temperature detectors are used to provide three basic functions: indication, alarm, and control. The temperatures monitored may normally be displayed in a central location, such as a control room, and may have audible and visual alarms associated with them when specified preset limits are exceeded. These temperatures may have control functions associated with them so that equipment is started or stopped to support a given temperature condition or so that a protective action occurs.

      In making the normal tour of operations, should the Facility Representative observe abnormal readings on any control system, he/she should treat them as accurate, investigate, and take corrective action.

      Question: Describe an automatic control system, including the four functions required for an automatic control system to operate.

      Preferred Response: In a nuclear facility, there may be many temperature, pressure, flow, and fluid level detectors in use throughout the facility that send information back to a control room. The three basic functions that these detectors provide are indication, alarm, and control. (Ref: DOE-HDBK-1013-92)

2. References

   a. DOE-HDBK-1013-92, *DOE Fundamentals Handbook - Instrumentation and Control, Volume 1*.

   b. DOE Order 5480.19, *Conduct of Operations Requirements for DOE Facilities*, Attachment 1, Chapter II.C.6.

Competency 1.13: Personnel shall demonstrate familiarity level knowledge of control system principles of operation and uses.

1. Supporting Knowledge and Skills

   a. Describe an automatic control system, including the four functions required for an automatic control system to operate.

      Background: A closed-loop control system is one in which control action is dependent on the output. Let's use an example of a water storage tank with a control system that maintains the water level in the storage tank. The system performs this task by continuously sensing the level in the tank and adjusting a supply valve to add more or less water to the tank. The desired level is preset by an operator, who is not part of the system.

      In any automatic control system, the four basic functions that occur are:
      - Measurement
      - Comparison
      - Computation
      - Correction

      In the water tank level control system in the example above, the level transmitter measures the level within the tank. The level transmitter sends a signal representing the tank level to the level control device, where it is compared to a desired tank level. The level control device then computes how far to open the supply valve to correct any difference between actual and desired tank levels.

      Question: List the four basic functions required for an automatic control system to operate.

      Preferred Response: Measurement, Comparison, Computation, and Correction. (Ref: DOE-HDBK-1013-92)

   b. Describe an automatic control system, including the four functions required for an automatic control system to operate.

      Background: "A closed loop control system is one in which control action is dependent on the output. The control system maintains water level in a storage tank by continuously sensing the level in the tank and adjusting the water supply valve to add more or less water to the tank. The desired level is preset by an operator who is not part of the system."

      Question: A production facility contains a safety-related water storage tank. The water within this tank is controlled by a system that continuously senses the water level and adjusts the supply valve to maintain a desired, preset level. What would be the term that best describes this type of control system?

Preferred Response: Closed loop control system. (Ref: DOE-HDBK-1013-92)

c. Describe the color coding and symbols used for precautions and controls of industrial hygiene hazards.

From: 29 CFR 1910.144

a) Color identification
   1. Red. Red shall be the basic color for the identification of:
      i. Fire protection equipment and apparatus. [Reserved]
      ii. Danger.
      iii. Stop. Emergency stop bars on hazardous machines shall be red. Stop buttons or electrical switches used for emergency stopping of machinery shall be red.
   2. Yellow.
      i. Yellow shall be the basic color for designating caution and for marking physical hazards such as: striking against, stumbling, falling, tripping, and "caught in between."

Question: What color is used on signs and/or emergency shutoff buttons to signify danger?

Preferred Response: Red.

Question: What color is used on signs to signify caution or physical hazards?

Preferred Response: Yellow. (Ref: 29 CFR 1910.144)

2. References

a. DOE-HDBK-1013-92, *DOE Fundamentals Handbook - Instrument and Controls*, Volume 2.

b. 29 CFR 1910.144, "Occupational Safety and Health Standards."

Competency 1.14: Personnel shall demonstrate familiarity level knowledge of chemistry fundamentals in the areas of theory and the periodic table.

1. Supporting Knowledge and Skills

   a. Given a periodic table, identify and explain the significance of the arrangement of elements to include the following:
      - Section A - Periods
      - Section B - Classes
      - Section C - Group characteristics

      Background: A table in which elements with similar chemical properties are grouped together is called a periodic table. In this table, elements are arranged in order of increasing atomic number in succeeding rows. Each horizontal row is called a *period*. Note that some periods are longer than others. Elements with similar chemical properties appear in vertical columns called *groups*. Each group is designated by a Roman numeral and a capital letter, except the one on the extreme right-hand side, Group 0 (the inert gases). At the bottom of the periodic table are two long rows of elements identified as the lanthanide series and the actinide series. They are separated from the table primarily to keep it from becoming too wide. Also, the elements within each of these two series show similar chemical properties.

      There are three broad *classes* of elements. These are the metals, the non-metals, and semi-metals. In the diagram, the semi-metals are indicated with a cross-hatch pattern. On the left side of the semi-metals class of elements is the metals class of elements and constitutes to largest of the class of elements. On the right side is the non-metals class of elements.

      Question: Identify the subdivisions of the Periodic Table.

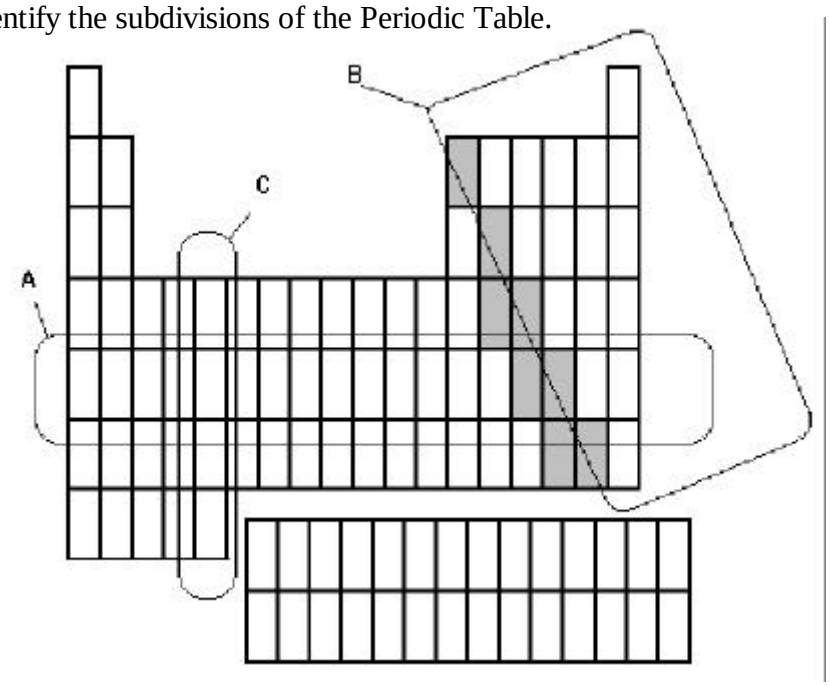

Preferred Response:

_____ A Periods of the table

_____ C Groups of the table

_____ B Classes of the table

(Ref: DOE-HDBK-1015-93)

2. References

   a. DOE-HDBK-1015-93, *DOE Fundamentals Handbook - Chemistry Fundamentals*, Volume 1.

Competency 1.15: Personnel shall demonstrate familiarity level knowledge of chemistry fundamentals in the areas of chemical bonding and chemical reactions.

1. Supporting Knowledge and Skills

   a. Discuss the following terms:
      - Acid
      - Base
      - POH
      - Salt
      - pH

      Background: Many compounds dissolve in water and alter the hydrogen ion concentration. Compounds that produce hydrogen ions directly when dissolved in water are called acids, and those that produce hydroxyl ions directly when dissolved in water are called bases. This system is based on a quantity called *pH*. pH is defined as the negative logarithm of the hydrogen concentration, represented as $[H^+]$ in moles/liter.

      $$pH = -\log [H^+]$$

      The negative logarithm is specified because the logarithm of any number less than 1 is negative; thus multiplication by -1 causes the values of pH to be positive over the range in which we are interested.

      Question: Define pH.

      Preferred Response: pH is the negative logarithm of the effective hydrogen ion concentration. (Ref: DOE-HDBK-1015-93)

      Background: The pH scale goes from 0-14 with acids occupying 0-6, pure water at neutral 7, and bases from 8-14. The extremes of the scale represent the stronger acids and bases. For example, hydrochloric acid is pH = 0 and sodium hydroxide is pH = 14.

      Question: A truck carrying drums of chemicals has been involved in an accident. The labels on the drums have been obliterated to the point that the only readable part of the label says the contents have a pH of 4. What would this tell you?

      Preferred Response: The contents are acidic. (Ref: DOE-HDBK-1015-93)

2. References

   a. DOE-HDBK-1015-93, *DOE Fundamentals Handbook - Chemistry*, Volume 1 and Volume 2, Module 1, page 48.

Competency 1.16: Personnel shall demonstrate familiarity level knowledge of chemistry fundamentals in the areas of corrosion and water treatment.

1. Supporting Knowledge and Skills

   a. Describe the general safety precautions necessary for the handling, storage, and disposal of corrosives.

   Background: The Hazards of Corrosives - Alkalies are more destructive than acids. Alkali dusts, mists, and sprays can cause irritation of nasal passages, eyes, and the respiratory tract. When in contact with the tissue, strong alkalies will cause ulcers, severe burns and eventual scarring. Ingestion causes perforations of the mucous membrane and deeper tissues; death may result if penetration is in vital areas.

   Precautions when using corrosives:
   - An adequate supply of washdown water must be available.
   - Proper ventilation in corrosive work area must be provided.
   - Proper drainage must be provided such that exposure is limited.
   - Face shields and safety glasses that protect the eyes from splashes and extensive vapor should be worn.
   - Proper personnel safety equipment should be worn when appropriate (chemical gloves, respirators, coveralls, etc.)

   Precautions when storing corrosives:
   - The building, or area within the building selected, should be of fire resistant construction.
   - The floors should be composed of chemical-resistant brick or treated concrete, be washable, and be provided wide adequate drainage.
   - A wetsuit and ventilated area in which there are adequate outlets for water should be provided.
   - A relatively cool and dry environment should be maintained, preventing extremes of temperature and humidity.
   - Electrical fixtures should be protected against corrosive mists, and wiring should be enclosed and covered with corrosive-resistant material.

   Question: While performing a walkthrough of a facility, you approach a work area where corrosives are being used. Which of the following is not an appropriate precaution for working with corrosives?
   a) An adequate supply of wash down water.
   b) Storage in an NFPA approved cabinet.
   c) Proper ventilation in the work area.
   d) Use of face shield and safety glasses.

   Preferred Response: b) Storage in an NFPA approved cabinet. (Ref: DOE-HDBK-1015-93)

b. Explain the process of general corrosion of iron and steel when exposed to water.

Background: Corrosion is electrochemical in nature because the corrosive chemical reactions involve transfer of charge. Iron goes into solution as $Fe^{+}$ ions. As these ions go into solution, the metal becomes negatively charged (by the electrons left behind) with respect to the electrolyte. A potential difference (voltage) is produced between the electrolyte and the metal. The process in which electrons are given up and positive metal ions are formed is called oxidation. The sites at which the oxidation takes place on the surface of the metal become electrochemical cells made up of micro-electrodes of the two different substances, the metal and the electrolyte. If a different metal is used, it will go into solution to a greater (or lesser) extent producing a larger (or smaller) potential difference between the metal and electrolyte than was the case for iron. The order of the series can change for different electrolytes (for example, different pH, ions in solution).

Question: Corrosion is basically defined as the result of reactions that involve the transfer of charged ions from the material into the environment. Which of the following terms is the correct technical name for this reaction:
a) Bimetallic Reaction
b) Electrochemical Reaction
c) Micrometallic Reaction
d) Oxidation Reaction

Preferred Response: b) Electrochemical Reaction. (Ref: DOE-HDBK-1015/1-93)

c. Explain the process of general corrosion of iron and steel when exposed to water.

Background: Like most other chemical reactions, corrosion rates increase as temperature increases. Temperature and pressure of the medium govern the solubilities of the corrosive species in the fluid, such as oxygen ($0^2$), carbon dioxide ($CO^2$), chlorides, and hydroxides. A rule of thumb is that the reaction rate doubles with a $20^0$F to $50^0$F temperature rise. This linear increase with temperature does not continue indefinitely, due, in part, to a change in the oxide film. When water velocity is extremely high, the impact of the water tends to remove the protective oxide layer and some of the metal under it (erosion), thus exposing more metal to corrosion. Water velocities of 30 to 40 feet per second are usually considered to cause erosion. The presence of oxygen in water to which iron is exposed increases the corrosion rate. The reason for this increase is the rapid reaction between oxygen and the polarizing layer of atomic hydrogen absorbed on the oxide layer. The hydrogen normally dissolved in reactor coolant does not have any detectable direct effect upon the corrosion rate of the iron and steels exposed to reactor coolant. It does, however, have an important indirect effect by preventing the accumulation of dissolved oxygen in reactor coolant, which would accelerate corrosion. Dissolved oxygen reacts with the protective hydrogen gas layer at the cathode to form water. The condition and composition of the metal surfaces affects the corrosion rate. Deposits, scale, or irregular surfaces create areas on the metal where local corrosion can initiate and proceed at a faster rate than normal. Certain alloys of metals have higher corrosion resistance than others, as discussed in the Material Science Handbook. When iron or steel is exposed to high temperature

water, the rate of corrosion of the metal is observed to decrease with exposure time during the early period of exposure. After a few thousand hours, the corrosion rate becomes relatively constant at a low value. During the early period of exposure, while the corrosion rate is decreasing, the oxide film on the surface of the metal grows in thickness. However, the rate at which the film grows decreases with time. The thickness of the oxide film soon reaches a relatively constant value, and thereafter film thickness does not change appreciably with further exposure. As might be expected, a relatively constant corrosion rate and oxide film thickness are attained at about the same time. Because a tightly adhering corrosion film inhibits further corrosion, great care is taken during the initial fill of reactor plants to promote formation of the best possible corrosion film. This process, referred to as pretreatment, or pickling, involves careful control of reactor coolant water chemistry and temperature during the pretreatment period.

Question: When discussing general corrosion of metals in a water solution, there are some factors that can affect the rate of corrosion. Which of the following are important in the rate of corrosion for metals in a water solution:
a) Temperature
b) High rate of solution flow
c) Presence of oxygen
d) All of the above

Preferred Response: d) All of the above. (Ref: DOE-HDBK-1015-93)

d. Discuss the reason for removing impurities from water prior to use in nuclear systems.

Background: In DOE facilities, especially reactor plants, many precautions are taken to control the corrosion of metals used in the various primary and secondary systems. Rapid localized corrosion may lead to penetration of the metal containing the coolant. Radioactive coolant would then leak from the system and jeopardize safe operations. Corrosion of the nuclear fuel cladding may cause the cladding to become brittle and less ductile. The swelling from the generation of fission gases within the fuel may then cause the cladding to crack or blister, and highly radioactive fission products may then be released to the coolant. Some of the metallic oxide corrosion products released to the coolant may be deposited on surfaces in the reactor core. The neutron flux then produces nuclear reactions in the corrosion products, and they become highly radioactive. Subsequently, these activated corrosion products may be released from the core and redeposited on surfaces outside the core region. The radiation fields resulting from this redeposited material may then significantly increase radiation levels, thereby complicating maintenance and access capabilities. The corrosion product oxides may also result in fouling of heat transfer surfaces and in the accelerated wear of moving parts by corrosion products trapped in or between them.

Question: Which of the following statements best applies to reasoning for controlling corrosion at DOE facilities:
a) Rapid localized corrosion may lead to the penetration of the metal containing the reactor coolant or hazardous chemical material, leading to a leak and jeopardizing safe operations.

b) In reactors, corrosion coating of the nuclear fuel can cause the cladding to become brittle and less ductile, allowing the cladding to crack or blister and releasing fission products into the coolant.
c) Corrosion can lead to the production of crud, which can increase the potential for reactor problems and the potential for higher dose exposures to individuals.
d) All of the above

Preferred Response: d) All of the above. (Ref: DOE-HDBK-1015-93)

e. Discuss two conditions that can cause galvanic corrosion.

Background: Galvanic corrosion is the corrosion that results when two dissimilar metals with different potentials are placed in electrical contact in an electrolyte.

Of all the different types of corrosion, galvanic corrosion corresponds most closely to the electrochemical cells because galvanic corrosion occurs when two electrochemically dissimilar metals are joined together (in electrical contact) in a conducting medium (electrolyte). It may also take place with one metal with heterogeneities (dissimilarities) (for example, impurity inclusions, grains of different sizes, difference in composition of grains, differences in mechanical stress), abnormal levels of pH, and high temperatures. A difference in electrical potential exists between the different metals and serves as the driving force for electrical current flow though the electrolyte. This current results in corrosion of one of the metals. The larger the potential difference, the greater the probability of galvanic corrosion. Galvanic corrosion only causes deterioration of one of the metals. The less resistant, active metal becomes the anodic corrosion site. The stronger, more noble metal is cathodic and protected. If there were no electrical contact, the two metals would be uniformly attacked by the corrosive medium as if the other metal were absent. Two locations susceptible to galvanic corrosion is a piping transition from one metal to another and a sacrificial anode (such as zinc). (Ref: DOE-HDBK-1015-93)

f. Discuss the concept of ion exchange.

Background: The use of cathodic protection, supplying an external electric current to a metal so that it acts as a cathode and has no anodic areas, is another method of preventative chemical control. This can be accomplished by the use of an external voltage source or by the use of a sacrificial anode (e.g., zinc) which will corrode and provide the current. Cathodic protection is achieved by applying an electrical current to the iron piping of heat systems. (Ref: DOE-HDBK-1015-93)

g. Discuss oxidizing agents and their contribution to the corrosive process.

Question: What is the product when an oxidizing agent reacts?

Preferred Response: It provides oxygen to the resulting reaction. (Ref: DOE-HDBK-1015-93**)**

2. References

a. DOE-HDBK-1015-93, *DOE Fundamentals Handbook Chemistry*, Volumes 1 and 2.

Competency 1.17: Personnel shall demonstrate working level knowledge of chemistry fundamentals in the area of safety.

1. Supporting Knowledge and Skills

a. Discuss the general safety precautions regarding toxic compounds.

Background: Permissible practice: in the control of those occupational diseases caused by breathing air contaminated with harmful dusts, fogs, fumes, mists, gases, smokes, sprays, or vapors, the primary objective shall be to prevent atmospheric contamination. This shall be accomplished as far as feasible by accepted engineering control measures (for example, enclosure or confinement of the operation, general and local ventilation, substitution of less toxic materials). When effective engineering controls are not feasible, or while they are being instituted, appropriate respirators shall be used pursuant to the following requirements.

Question: Which control method would you consider LEAST effective for a small toxic vapor process?

Preferred Response: Use of approved respirators. (Ref: 29 CFR 1910, Subpart I, Appendix. B.1)

b. Explain the difference between a flammable liquid and a combustible liquid.

Background: Flammable and combustible liquids vaporize to form flammable mixtures when they are stored in open containers, when they leak or are spilled, or when heated. The hazard that exists from these mixtures is largely dependent upon the flash point of the liquid, the concentration of the mixture, and the potential of a source of ignition at a temperature sufficient to cause the mixture to burst into flame. Since it is the vapor-air mixture formed from the evaporation of the liquid that poses the hazard, exposures of large liquid surface areas and sources of heat should be avoided or prevented during handling or storage of these liquids. Some of the commonly used terms associated with flammable and combustible liquids are provided below.

Auto-Ignition Temperature - The minimum temperature at which a flammable mixture will ignite from its own heat source or contact with a heated surface without necessity of a spark or flame.

Flash Point - The minimum temperature at which a liquid gives off vapor in sufficient concentration to form an ignitible mixture with air near the surface of the liquid (under controlled test conditions).

Flammable Limits - The minimum concentration of vapor in air below which propagation of flame does not occur on contact with a source of ignition.

Flammable Range - The difference between the lower and upper flammable limits, expressed in percentage of vapor or gas in air by volume. Also known as the explosive range.

Propagation of Flame - The spread of flame through the entire volume of the flammable mixture from a single source of ignition.

Volatility - The tendency or ability of a liquid to vaporize.

Question: The minimum temperature at which a liquid gives off vapor in sufficient concentration to form an ignitable mixture with air near the surface of the liquid is the definition of _____.

Preferred Response: Flash point. (Ref: DOE-HDBK-1015-93)

c. Discuss the hazards associated with the use of corrosives (acids and alkalies).

Background: The Hazards of Corrosives: Alkalies are more destructive than acids. Alkali dusts, mists, and sprays can cause irritation of nasal passages, eyes, and respiratory tract. When in contact with the tissue, strong alkalies will cause ulcers, severe burns, and eventual scarring. Ingestion causes perforations of the mucous membrane and deeper tissues; death may result if penetration is in vital areas.

Question: Based on your knowledge of corrosive chemicals, which of the following is not true?
a) Corrosive alkali compounds are more destructive than corrosive acid compounds.
b) Corrosive materials must be stored in glass or special plastic containers.
c) Corrosive chemicals are always classified as acids.
d) Corrosive chemicals can quickly cause damage to organic tissue, metals and other solids.

Preferred Response: c) Corrosive chemicals are always classified as acids. (Ref: DOE-HDBK-1015-93)

d. Describe the criteria used to determine if a compound is a health hazard and discuss the methods by which toxic compounds may enter the body.

Material Safety Data Sheets (MSDSs) provide information such as chemical and physical characteristics, health and physical hazards, precautions, and other information about a hazardous material.

Question: Describe the elements of an MSDS.

Preferred Response: Each MSDS contains the following information regarding its use:

1. Background information on the material - Includes the product name/synonyms, manufacturer name and address, and the date of MSDS preparation. Also in this section are two telephone numbers: one is for use when there is an emergency situation involving the material, and the other is for obtaining additional information such as technical data.

2. Hazardous ingredients and identity information - Chemical products are often mixtures of several ingredients, and the MSDS must identify all hazardous ingredients that are contained in the mixture. This section is required to list the chemical and common name of each ingredient, specify the OSHA permissible exposure limit (PEL), and specify the American Conference of Governmental Industrial Hygienists (ACGIH) threshold limit value (TLV). The relative makeup by percentage of the individual items in the product is optional in this section.

3. Physical and chemical properties - Includes physical and chemical properties such as boiling point, melting point, density, vapor pressure, specific gravity, water-solubility, and general appearance and odor. Such data indicate the physical state of the substance and its reaction under certain circumstances.

4. Fire and explosion hazard data - Lists special fire or explosion hazards associated with the materials. It also includes fire fighting procedures such as the best fire extinguishing and personal protective equipment. This section identifies the flash point of the material in order to indicate the minimum temperature at which the substance will give off sufficient vapor to support combustion. Also included is the amount of gas/vapor of the substance, by volume in air, that will explode or burn if ignited.

5. Reactivity data - Indicates the stability of the chemical and identifies incompatible materials and conditions to avoid. Hazardous decomposition by-products are listed only if the material is at risk of decomposition. If a chemical has a tendency to polymerize, any associated hazards are also listed in this section. Polymerization is the process by which chemicals self-react and combine to form larger molecules.

6. Health hazard data - Includes a list of overexposure indicators and routes of entry. This section also lists existing medical conditions that are aggravated by exposure to the material. For each route of entry there must be a list of immediate (acute) health effects, delayed (chronic) health effects, emergency and first-aid procedures, and exposure limits (for airborne hazards).

7. Precautions for safe handling and use - Involves instructions for storage, containment, recovery, and disposal. The handling and storage portion may provide information such as temperature ranges, humidity ranges, and other climatic information. Special requirements for transportation should also be listed here.

8. Control measures - Details control measures, especially personal protective equipment. Included here are appropriate cartridges for respirators, specific materials for gloves and protective clothing, and necessary eye and face protection. The level of ventilation required is also listed.

(Ref: 29 CFR 1910.1200.[g])

e. Background Information: Hazard is the possibility that a material will cause injury when a specific quantity is used under specific conditions. Several key elements are considered when evaluating a health hazard.
   - Toxicity of the materials used
   - Physical properties of these materials
   - Absorption probabilities of these materials by individuals
   - Extent and intensity of exposure to these materials
   - Control measures used

   In general, industrial poisonings usually result from inhalation, ingestion, and absorption. The inhalation and absorption of toxic agents by the lungs is dependent upon the solubility in body fluids, the defusion through the lungs, the volume of inhalation, the volume of blood in the lungs, and the concentration gradient of vapors between the inhaled air and the blood. Ingestion of the toxic agent can occur to some extent; however, there would generally be considerable inhalation of the material where such conditions exist. Absorption through the skin can occur upon exposure to some toxic agents. Some liquids and vapors are known to pass through the skin in concentrations high enough such that respiratory protection is not adequate. For example, hydrogen cyanide (HCN) is known to pass through the unbroken skin. Consideration should be given to the type of work clothes being worn; if they become saturated with solvents, they will act as a reservoir to bathe the body continually with the harmful material.

   Question: There are several mechanisms for a toxic or hazardous chemical to enter a "body." List all of the correct "routes of entry," as referenced in the DOE Standards.

   Preferred Response: Inhalation, ingestion, and absorption. (Ref: DOE-HDBK-1015-93)

f. Background: One of the concerns in the area of chemistry safety is carcinogens. One class of those carcinogens is polychlorinated biphenyls, or PCBs. PCB or PCBs mean any chemical substance that is limited to the biphenyl molecule that has been chlorinated to varying degrees or any combination of substances that contain the substance. Refer to 40CFR761.1(b) for applicable concentrations of PCBs. Refer to 40CFR Subparts C & D for the requirements for the marking and the storage and disposal of PCBs, respectively.

   Question: A yellow and black polychlorinated biphenyl label on a piece of equipment or container indicates the presence of polychlorinated biphenyl at concentrations of:

   Preferred Response: $\geq$ 50 ppm.

   Question: The maximum time polychlorinated biphenyl items may be stored in temporary storage areas is _____ days.

   Preferred Response: 30. (Ref: 40 CFR 702-775)

g. Describe the general safety precautions regarding the use, handling, and storage of flammable and combustible liquids.

Question: What is the most important practice in storing flammable chemicals?

Preferred Response: Segregation. (Ref: 29 CFR 1910.106)

Question: An explosion meter reads 25%; what does this reading indicate?

Preferred Response: The concentration of vapors is one-fourth of the lower explosive limit. (Ref: NFPA 70)

2. References

a. 29 CFR 1910, Subpart I, Appendix B.1, 1910.106, and 1910.1200[g], "Occupational Safety and Health Standards."

b. DOE-HDBK-1015-93, *DOE Fundamentals Handbook - Chemistry*, Volume 2.

d. 40 CFR 702-775, "General Practices and Procedures."

e. NFPA 70, *National Electrical Code*.

Competency 1.18: Personnel shall demonstrate familiarity level knowledge of basic thermodynamics concepts and theories.

1. Supporting Knowledge and Skills

   a. Differentiate the concepts of temperature and heat (as part of defining energy, potential energy, kinetic energy, work, and heat).

      Background: In describing heat transfer problems, the terms heat and temperature are often mistakenly interchanged. Actually, there is a distinct difference between the two. Temperature is a measure of the amount of energy possessed by the molecules of a substance. It is a relative measure of how hot or cold a substance is and can be used to predict the direction of heat transfer. The symbol for temperature is T. The common scales for measuring temperature are the Fahrenheit, Rankine, Celsius, and Kelvin temperature scales.

      Heat is energy in transit. It is the transfer of energy as heat occurs at the molecular level as a result of a temperature difference. Heat is capable of being transmitted through solids and fluids by conduction, through fluids by convection, and through empty space by radiation. The symbol for heat is Q. Common units for measuring heat are the British Thermal Unit (Btu) in the English system of units and the calorie in the SI system (International System of Units).

      Question: In discussing temperature and heat, a common mistake is to interchange their use. How are the terms differentiated?

      Preferred Response: Heat is a measure of the energy possessed by the molecules of a substance. Temperature is a relative measure of how hot or cold a substance is.
      (Ref: DOE-HDBK-1012/1-92)

   b. Describe the thermodynamic properties of temperature and pressure.

      Background: An increase in temperature will tend to decrease the density of any fluid. If the fluid is confined in a container of fixed volume, the effect of a temperature change will depend on whether the fluid is compressible. If the fluid is a gas, it will respond to a temperature change in a manner predicted by the ideal gas laws. A 5% increase in absolute temperature will result in a 5% increase in the absolute pressure.

      If a fluid is an incompressible liquid in a closed container, an increase in the temperature will have a tremendously greater and potentially catastrophic effect. As the fluid temperature increased, it tries to expand, but expansion is prevented by the walls of the container. Because the fluid is incompressible, this results in a tremendous increase in pressure for a relatively minor temperature change. The change in specific volume for a given change in temperature is not the same at various beginning temperatures. Resultant pressure changes will vary. A useful thumb rule for water is that pressure in a water-solid system will increase about 100 psi for every 1 degree Fahrenheit increase in

temperature.

Question: Describe the result of increasing the temperature of an incompressible liquid in a closed container.

Preferred Response: Pressure will increase significantly. (Ref: DOE-HDBK-1012-92)

c. Describe the types of heat (as part of defining energy, potential energy, kinetic energy, work, and heat).

Background: The best way to quantify the definition of heat is to consider the relationship between the amount of heat added to or removed from a system and the change in the temperature of the system. Everyone is familiar with the physical phenomena that when a substance is heated, its temperature increases, and when it is cooled, its temperature decreases. The heat added to or removed from a substance to produce a change in its temperature is called *sensible heat.* The units of heat are often defined in terms of the changes in temperature it produces. Another type of heat is called *latent heat.* Latent heat is the amount of heat added to or removed from a substance to produce a change in phase. When latent heat is added, no temperature change occurs. There are two types of latent heat. The first is the *latent heat of fusion.* This is the amount of heat added or removed to change phase between solid and liquid. The second type of latent heat is the *latent heat of vaporization.* This is the amount of heat added or removed to change phase between liquid and vapor. The latent heat of vaporization is sometimes called the latent heat of condensation.

Question: What is sensible heat?

Preferred Response: The heat added to or removed from a substance to produce a change in temperature, without changing phases of the substance.

Question: Define latent heat.

Preferred Response: Latent heat is the amount of heat added to or removed from a substance to produce a change in phase. When latent heat is added, no temperature change occurs.
(Ref: DOE-HDBK-1012/1-92)

d. Describe the attributes of heat (as part of defining energy, potential energy, kinetic energy, work, and heat).

Background: Different substances are affected to different magnitudes by the addition of heat. When a given amount of heat is added to different substances, their temperatures increase by different amounts. The ratio of the heat added to or removed from a substance to the change in temperature produced is called the *heat capacity* of the substance. The heat capacity of a substance per unit mass is called the *specific heat* of the substance.

Question: Define heat capacity.

Preferred Response: The ratio of the heat added to or removed from a substance to the change in temperature produced. (Ref: DOE-HDBK-1012/1-92)

2. References

   a. DOE-HDBK-1012-92, *DOE Fundamentals Handbook - Thermodynamics, Heat Transfer, and Fluid Flow*, Volumes 1 and 2.

Competency 1.19: Personnel shall demonstrate familiarity level knowledge of basic heat transfer and fluid flow concepts and theories.

1. Supporting Knowledge and Skills

   a. Describe the three basic modes of heat transfer.

      Background: The transfer of energy as heat occurs at the molecular level as a result of a temperature difference. Heat is capable of being transmitted through solids and fluids by conduction, through fluids by convection, and through empty space by radiation. Specifically, conduction is the transfer of heat by the interactions of atoms or molecules of a material through which the heat is being transferred. Convection is the transfer of heat by the mixing and motion of macroscopic portions of the fluid. Radiation, or radiant heat transfer, is the transfer of heat by means of electromagnetic waves or particles. (Most of this energy, also referred to as thermal radiation, is in the infrared region of the electromagnetic spectrum.)

      Question: Define the three basic modes of heat transfer.

      Preferred Response: Conduction is the transfer of heat by the interactions of atoms or molecules of a material through which the heat is being transferred. Convection is the transfer of heat by the mixing and motion of macroscopic portions of the fluid. Radiation, or radiant heat transfer, is the transfer of heat by means of electromagnetic waves or particles. (Ref: DOE-HDBK-1012-92)

   b. Describe the phenomenon of water hammer, pressure spike, and steam hammer.

      Background: Water hammer is a liquid shock wave resulting from the sudden starting or stopping of flow. It is affected by the initial system pressure, the density of the fluid, the speed of sound in the fluid, the elasticity of the fluid and pipe, the change in velocity of the fluid, the diameter and thickness of the pipe, and the valve operating time.

      During the closing of a valve, kinetic energy of the moving fluid is converted into potential energy. Elasticity of the fluid and pipe wall produces a wave of positive pressure back toward the fluid's source. When this wave reaches the source, the mass of fluid will be at rest, but under tremendous pressure. The compressed liquid and stretched pipe walls will now start to release the liquid in the pipe back to the source and return to the static pressure of the source. This release of energy will form another pressure wave back to the valve. When this shock wave reaches the valve, due to the momentum of the fluid, the pipe wall will begin to contract. This contraction is transmitted back to the source, which places the pressure in the piping below that of the static pressure of the source. These pressure waves will travel back and forth several times until the fluid friction dampens the alternating pressure waves to the static pressure of the source. Normally, the entire hammer process takes place in under one second.

The initial shock of suddenly stopped flow can induce transient pressure changes that exceed the static pressure. If the valve is closed slowly, the loss of kinetic energy is gradual. If it is closed quickly, the loss of kinetic energy is very rapid. A shock wave results because of this rapid loss of kinetic energy. The shock wave caused by water hammer can be of sufficient magnitude to cause physical damage to piping, equipment, and personnel. Water hammer in pipes has been known to pull pipe supports from their mounts, rupture piping, and cause pipe whip.

Question: Describe the effects of water hammer.

Preferred Response: Water hammer can cause serious damage to equipment and can create personnel hazards due to the development of a high energy water slug moving through a closed system. (Ref: DOE-HDBK-1012-92)

2. References

a. DOE-HDBK-1012-92, *DOE Fundamental Handbook - Thermodynamics, Heat Transfer, and Fluid Flow*, Volumes 1, 2, and 3.

Competency 1.20: Personnel shall demonstrate familiarity level knowledge of basic material science in the areas of concepts, theories, and principles.

1. Supporting Knowledge and Skills

   a. Identify and describe the characteristics of the following crystal structures:
      - Body-centered cubic structure
      - Face-centered cubic structure
      - Hexagonal close-packed structure

   Background: In metals, and in many other solids, the atoms are arranged in regular arrays called crystals. A *crystal structure* consists of atoms arranged in a pattern that repeats periodically in a three-dimensional geometric lattice. The forces of chemical bonding cause this repetition. It is this repeated pattern that controls properties like strength, ductility, density, conductivity (property of conducting or transmitting heat, electricity, etc.), and shape. In general, the three most common basic crystal patterns associated with metals are: the body-centered cubic (BCC), the face-centered cubic (FCC), and the hexagonal close-packed (HCP).

   In a BCC arrangement of atoms, the unit cell consists of eight atoms at the corners of a cube and one atom at the body center of the cube.

   In a FCC arrangement of atoms, the unit cell consists of eight atoms at the corners of a cube and one atom at the center of each of the faces of the cube.

   In a HCP arrangement of atoms, the unit cell consists of three layers of atoms. The top and bottom layers contain six atoms at the corners of a hexagon and one atom at the center of each hexagon. The middle layer contains three atoms nestled between the atoms of the top and bottom layers, hence, the name close-packed.

   Question: Identify the following types of crystal structures.

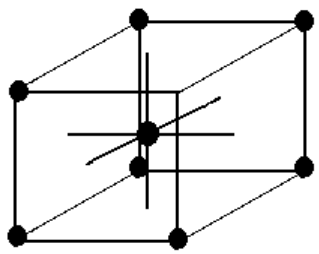

1

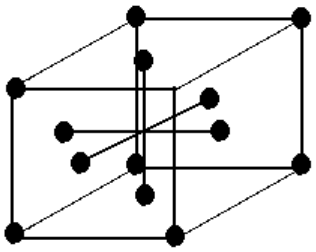

2

   Preferred Response: 1- Body Centered Cubic 2- Face Centered Cubic.
   (Ref: DOE-HDBK-1017-93)

b. Define the following terms:
   - Grain structure
   - Creep
   - Polymorphism
   - Grain boundary
   - Alloy
   - Grain

   Background: An alloy is a mixture of two or more materials, at least one of which is a metal. Alloys can have a microstructure consisting of solid solutions, where secondary atoms are introduced as substitials or interstitials in a crystal lattice. An alloy might also be a crystal with a metallic compound at each lattice point. In addition, alloys may be composed of secondary crystals imbedded in a primary polycrystalline matrix.

   Alloys are usually stronger than pure metals, although they generally offer reduced electrical and thermal conductivity. Strength is the most important criterion by which many structural materials are judged. Therefore, alloys are used for engineering construction. Steel, probably the most common structural metal, is a good example of an alloy. It is an alloy of iron and carbon, with other elements to give it certain desirable properties.

   Question: Define alloy.

   Preferred Response: Alloys are substances that have metallic properties and are composed of two or more chemical elements of which at least one is an elemental metal.
   (Ref: DOE-HDBK-1017/1-93)

c. Identify the three types of microscopic imperfections found in crystalline structures.

   Background: Microscopic Imperfections - Microscopic imperfections are generally classified as either point, line, or interfacial imperfections.
   1. Point imperfections have atomic dimensions.
   2. Line imperfections or dislocations are generally many atoms in length.
   3. Interfacial imperfections are larger than line defects and occur over a two dimensional area.

   Point imperfections can be divided into three main defect categories:
   1. Vacancy defects result from a missing atom in a lattice position. The vacancy type of defect can result from imperfect packing during the crystallization process, or it may be due to increased thermal vibrations of the atoms brought about by elevated temperature.
   2. Substitutional defects result from an impurity present at a lattice position.
   3. Interstitial defects result from an impurity located at an interstitial site or one of the lattice atoms being in an interstitial position instead of being at its lattice position. Interstitial refers to locations between atoms in a lattice structure.

Line imperfections are called dislocations and occur in crystalline materials only. Dislocations can be an edge type, screw type, or mixed type, depending on how they distort the lattice. They must end at a crystal edge or other dislocation, or they must close back on themselves. Edge dislocations consist of an extra row or plane of atoms in the crystal structure. Slip occurs when the crystal is subjected to a stress, and the dislocation moves through the crystal until it reaches the edge or is arrested by another dislocation. Screw dislocations can be produced by a tearing of the crystal parallel to the slip direction. The importance of dislocations is based on the ease at which they can move through crystals.

Interfacial imperfections exist at an angle between any two faces of a crystal or crystal form. These imperfections are found at free surfaces, domain boundaries, grain boundaries, or interphase boundaries. Free surfaces are interfaces between gases and solids. Domain boundaries refer to interfaces where electronic structures are different on either side-causing each side to act differently although the same atomic arrangement exists on both sides. Grain boundaries exist between crystals of similar lattice structure that possess different spacial orientation. Polycrystalline materials are made up of many grains that are separated by distances typically of several atomic diameters. Interphase boundaries exist between the regions where materials exist in different phases.

Question: Identify and describe the three types of microscopic imperfections found in crystalline structures.

Preferred Response: Microscopic imperfections are generally classified as either point, line, or interfacial imperfections:
1. Point imperfections have atomic dimensions.
2. Line imperfections or dislocations are generally many atoms in length.
3. Interfacial imperfections are larger than line defects and occur over a two dimensional area.

Question: Identify and describe the three types of point microscopic imperfections found in crystalline structures.

Preferred Response: The three types of point imperfections are:
1. Vacancy defects result from a missing atom in a lattice position. The vacancy type of defect can result from imperfect packing during the crystallization process, or it may be due to increased thermal vibrations of the atoms brought about by elevated temperature.
2. Substitutional defects result from an impurity present at a lattice position.
3. Interstitial defects result from an impurity located at an interstitial site or one of the lattice atoms being in an interstitial position instead of being at its lattice position. Interstitial refers to locations between atoms in a lattice structure. (Ref: DOE-HDBK-1017-93)

d. Discuss the following terms:
   - Compressibility
   - Stress
   - Shear stress
   - Tensile stress
   - Compressive stress

Background: Stress is the internal resistance, or counter force, of a material to the distorting effects of an external force or load. These counter forces tend to return the atoms to their normal positions. The total resistance developed is equal to the external load. This resistance is known as stress. Stresses occur in any material that is subject to a load or any applied force. There are many types of stresses, but they can all be generally classified in one of six categories: residual stresses, structural stresses, pressure stresses, flow stresses, thermal stresses, and fatigue stresses.

Residual stresses are due to the manufacturing processes that leave stresses in a material.

Structural stresses are produced in structural members because of the weights they support.

Pressure stresses are induced in vessels containing pressurized materials. The loading is provided by the same force producing the pressure.

Flow stresses occur when a mass of flowing fluid induces a dynamic pressure on a conduit wall. The force of the fluid striking the wall acts as a load. This type of stress may be applied in an unsteady fashion when flow rates fluctuate. Water hammer is an example of a transient flow stress.

Thermal stresses exist whenever temperature gradients are present in a material. Different temperatures produce different expansions and subject materials to internal stress.

Fatigue stresses are due to cyclic application of a stress. The stresses could be due to vibration or thermal cycling.

Question: Define material stress.

Preferred Response: Stress is the internal resistance, or counter force, of a material to the distorting effects of an external force or load. These counter forces tend to return the atoms to their normal positions.

Question: List and describe the six types of material stress.

Preferred Response:
1. Thermal - stresses due to the manufacturing process.
2. Residual - stresses due to cyclic application of a load.
3. Pressure - stresses induced in vessels containing pressurized materials.

4. Flow - stresses occur when a mass of flowing fluid induces a dynamic pressure on a conduit wall.
5. Structural - stresses developed in members due to the weight they support.
6. Fatigue - stresses produced whenever temperature gradients are present.

(Ref: DOE-HDBK-1017-93)

2. References

   a. DOE-HDBK-1017-93, *DOE Fundamentals Handbook - Material Science*, Volumes 1 and 2.

Competency 1.21: Personnel shall demonstrate a working level knowledge of engineering prints and drawings.

a. Given an engineering print, read and interpret the following information:
   - Title block
   - Notes
   - Legend
   - Revision Block
   - Drawing Grid

Background: DOE Handbook 1016/1-93, *Introduction to Print Reading*, identifies the five major areas or parts of a generic engineering drawing. The title block of a drawing, usually located on the bottom or lower right hand corner, contains all the information necessary to identify the drawing and to verify its validity. A title block is divided into several areas. The first area of the title block contains the drawing title, the drawing number, and lists the location, the site, or the vendor. Drawings are usually filed by their drawing number because the drawing title may be common to several prints or a series of prints. The second area of the title block contains the signatures and approval dates. The third area of the title block is the reference block. The reference block lists other drawings that are related to the system/component, or it can list all the other drawings that are cross referenced on the drawing.

Other information may also be contained in the title block and will vary from site to site and vendor. Some examples are contract numbers and drawing scale.

Question: A generic engineering drawing can be divided into several major parts. In which part would you determine if the drawing is to scale or not to scale?

Preferred Response: Title Block. (Ref: DOE-HDBK-1016-93)

Background: Engineering Fabrication, Construction, and Architectural Drawings. These three types of drawings represent the category of drawings commonly referred to as blueprints. Fabrication, construction, and architectural drawings differ from piping and instrument drawings (P&IDs), electrical prints, and logic diagrams in that they are drawn to scale and provide the component's physical dimensions so that the part, component, or structure can be manufactured or assembled. Although fabrication and construction drawings are presented as separate categories, both supply information about the manufacture or assembly of a component or structure. The only real difference between the two is the subject matter. A fabrication drawing provides information on how a single part is machined or fabricated in a machine shop, whereas a construction drawing provides the construction or assembly of large multi-component structures or systems. Fabrication drawings, also called machine drawings, are principally found in and around machine and fabrication shops where the actual machine work is performed. The drawing usually depicts the part or component as an orthographic projection with each view containing the necessary dimensions.

Question: Fabrication, construction, and architectural drawings differ from Piping and Instrument Drawings (P&ID's), electrical prints, and logic diagrams in that they:

Preferred Response: Contain grid lines and reference marks. (Ref: DOE-HDBK-1016-93)

b. Given an engineering print, identify the following valve types:
- Check valve
- Air operated valve
- Solenoid operated valve
- Hydraulic operated valve
- Manual operated valve
- Rising stem valve

Background: To read and interpret P&IDs, the reader must learn the meaning of the symbols. When the symbology is mastered, the reader will be able to interpret most P&IDs. The symbols presented herein are those most commonly used in engineering P&IDs. Valves are used to control the direction, flow rate, and pressure of fluids. It should be noted that globe and gate valves will often be depicted by the same valve symbol. In such cases, information concerning the valve type may be conveyed by the component identification number or by the notes and legend section of the drawing; however, in many instances even that may not hold true.

The figure below, shows the symbols that depict major valve types.

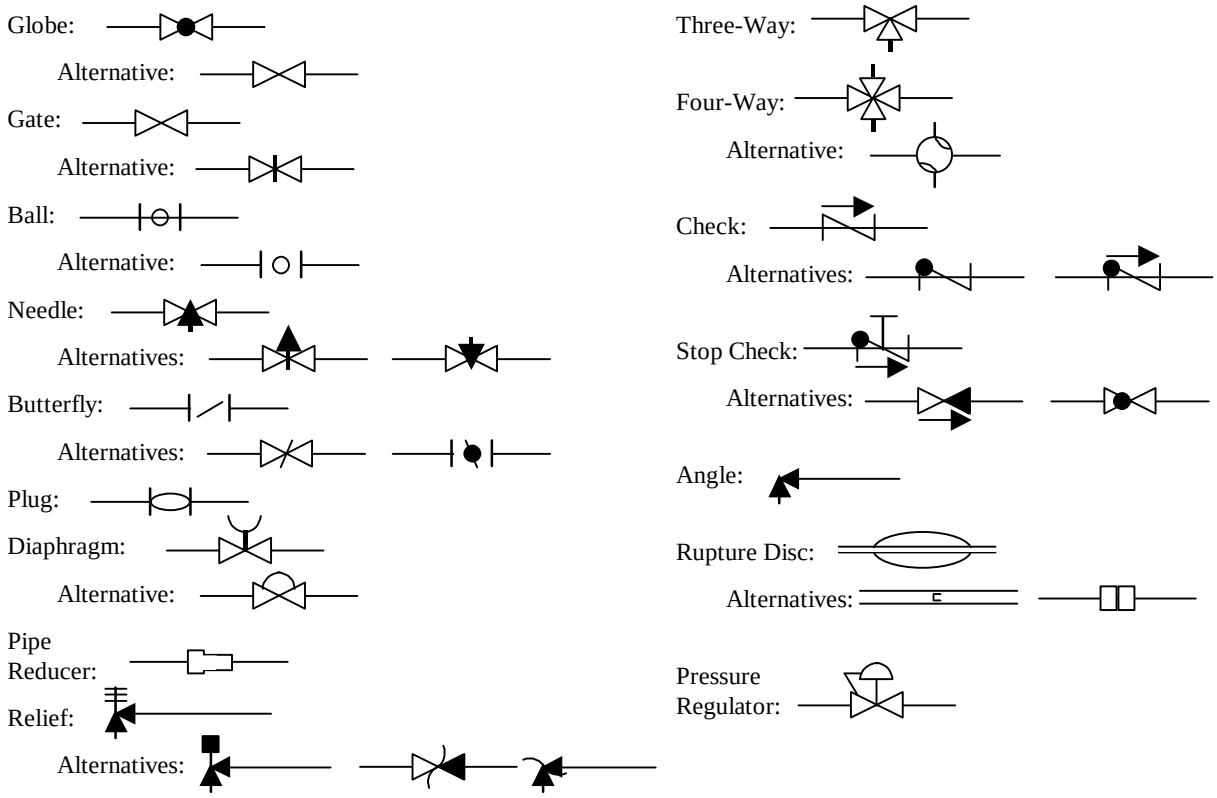

Question: For each of the drawings of valves below, match the proper type of valve from the list.

A) Solenoid Operated Valve B) Check Valve
C) Hydraulic Operated Valve D) Manual Operated Valve
E) Air Operated Valve F) Rising Stem Valve

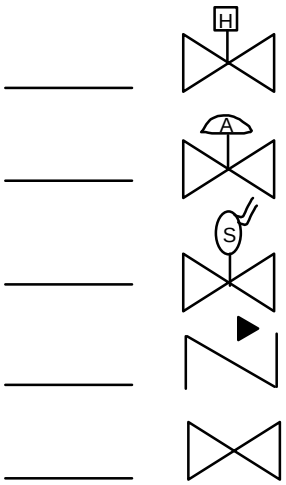


Preferred Response: C, E, A, B, D. (Ref: DOE-HDBK-1016-93)

2. References

a. DOE-HDBK-1016-93, *DOE Fundamentals Handbook - Introduction to Print Reading*, Volume 1.

b. DOE-HDBK-1016-93, *DOE Fundamentals Handbook - Engineering Symbology*, Volume 1 and Volume 2, Module 6.

Competency 1.22: Personnel shall demonstrate a working level knowledge of electrical prints, diagrams and schematics.

Competency 1.23: Personnel shall demonstrate a working level knowledge of electronic/logic block diagrams, prints, and schematics.

1. Supporting Knowledge and Skills

   a. Identify basic component symbols and explain their functions.

   Background: Symbology - There are three basic types of logic gates. They are AND, OR, and NOT gates. Each gate is a very simple device that only has two states, on and off. The states of a gate are also commonly referred to as high or low, 1 or 0, or True or False, where on = high = 1 = True, and off = low = 0 = False. The state of the gate, also referred to as its output, is determined by the status of the inputs to the gate, with each type of gate responding differently to the various possible combinations of inputs. Specifically, these combinations are as follows.

   AND gate - provides an output (on) when all its inputs are on. When any one of the inputs is off, the gate's output is off.

   OR gate - provides an output (on) when any one or more of its inputs is on. The gate is off only when all of its inputs are off.

   NOT gate - provides a reversal of the input. If the input is on, the output will be off. If the input is off, the output will be on. Because the NOT gate is frequently used in conjunction with AND and OR gates, special symbols have been developed to represent these combinations. The combination of an AND gate and a NOT gate is called a NAND gate. The combination of an OR gate with a NOT gate is called a NOR gate. NAND gate is the opposite (NOT) of an AND gate's output. It provides an output (on) except when all the inputs are on. NOR gate is the opposite (NOT) of an OR gate's output. It provides an output only when all inputs are off.

   Question: Identify the following three logic symbols.

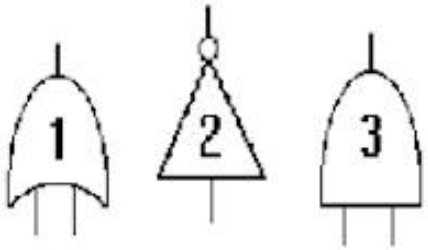


   Preferred Response: 1- OR 2 - NOT 3 - AND. (Ref: DOE-HDBK-1016-93)

b. Identify basic component symbols and explain their functions.

Background: AND gate - provides an output (on) when all its inputs are on. When any one of the inputs is off, the gate's output is off.

OR gate - provides an output (on) when any one or more of its inputs is on. The gate is off only when all of its inputs are off.

NOT gate - provides a reversal of the input. If the input is on, the output will be off. If the input is off, the output will be on.

Question: Which of the three basic logic gates is defined by the statement below?

> " _____ - provides an output (on) when all its inputs are on. When any one of the inputs is off, the logic gates output is off."

Preferred Response: AND gate. (Ref: DOE-HDBK-1016-93)

2. References

a. DOE-HDBK-1016-93, *DOE Fundamentals Handbook - Engineering Logic Diagrams*, Volume 2.

Competency 1.24: Personnel shall demonstrate a working level knowledge of engineering fabrication, construction, and architectural drawings.

1. Supporting Knowledge and Skills

   a. Given one of each of the above drawings, read and interpret:
      - Basic dimensional and tolerance symbology
      - Basic fabrication symbology
      - Basic construction symbology
      - Basic architectural symbology

      Background: Engineering drawings are the industry's means of communicating detailed and accurate information on how to fabricate, assemble, troubleshoot, repair, and operate a piece of equipment or a system. To understand how to "read" a drawing, it is necessary to be familiar with the standard conventions, rules, and basic symbols used on the various types of drawings. But before learning how to read the actual drawings, an understanding of the information contained in the non-drawing areas of a nuclear grade engineering drawing is needed. Because of the extreme variation in format, location of information, and types of information presented on drawings from vendor to vendor and site to site, all drawings will not necessarily contain the following information or format, but will usually be similar in nature.

      A generic engineering drawing can be divided into the following five major areas or parts:
      1. Title block
      2. Grid system
      3. Revision block
      4. Notes and legends
      5. Engineering drawing (graphic portion)

      Question: A generic engineering drawing can be divided into several major components or parts. In which part can you determine if the drawing is to scale?

      Preferred Response: The title block. (Ref: DOE-HDBK-1016/1-93)

      Question: Fabrication, construction, and architectural drawings differ from Piping and Instrument Drawings (P&IDs), electrical prints, and logic diagrams in that they:

      Preferred Response: Contain grid lines and reference marks. (Ref: DOE-HDBK-1016-93)

2. References

   a. DOE-HDBK-1016-93, *DOE Fundamentals Handbook - Engineering Symbology, Prints and Drawings*, Volumes 1 and 2.

**Responsibility Area 2.0 - Regulatory**

Competency 2.1: A Facility Representative shall demonstrate a working level knowledge of the purpose, scope, and application of applicable DOE Orders.

| | |
|---|---|
| 151.1 | 3790.1B |
| 225.2A | 4330.4A |
| 231.1-1 | 5400.5 |
| 232.1A | 5480.4 |
| 420.1 | 5480.19 |
| 425.1 | 5480.20a |
| 430.1A | 5480.21 |
| 440.1A | 5480.23 |
| 451.1A | 5820.2 |

1. Supporting Knowledge and Skills

   a. Demonstrate a working level knowledge of the purpose, scope, and application of applicable DOE Orders: DOE Standard 1063-97, *Establishing and Maintaining a Facility Representative Program at DOE Nuclear Facilities.*

   Background: A Safety Analysis is a documented process:
   - to provide systematic identification of hazards within a given DOE operation;
   - to describe and analyze the adequacy of measures taken to eliminate, control, or mitigate identified hazards; and
   - to analyze and evaluate potential accidents and their associated risks.

   A Safety Analysis Report (SAR) is defined as a report that documents the adequacy of a safety analysis to ensure that the facility can be constructed, maintained, shut down, and decommissioned safely and in compliance with applicable laws and regulations.

   Question: According to DOE Standard 1063-97, *Establishing and Maintaining a Facility Representative Program at DOE Nuclear Facilities*, there are several reasons for providing a documented Safety Analysis process. What are some of the required reasons?

   Preferred Response:
   1) Provide systematic identification of hazards within a given DOE operation
   2) Describe and analyze the adequacy of measures taken to eliminate, control, or mitigate identified hazards
   3) Analyze and evaluate potential accidents and their associated risks

   (Ref: DOE-STD-1063-97)

b. Demonstrate a working level knowledge of the purpose, scope, and application of applicable DOE Orders: DOE Order 5480.21, *Unreviewed Safety Questions.*

Background: The concept of the Unreviewed Safety Question (USQ) determination was established to allow contractors to make physical and procedural changes and to conduct tests and experiments without prior DOE approval, as long as these changes do not explicitly or implicitly affect the authorization basis of the facility or result in a Technical Safety Requirements (TSRs) change. Simply stated, a USQ is a condition that is outside the safety envelope as described in a facility's authorization basis documents.

Question: A proposed activity involves an Unreviewed Safety Question when the _____.

Preferred Response: Margin of safety is reduced with respect to the approved SAR.
(Ref: DOE Order 5480.21)

Background: A contractor authorized to operate DOE nuclear facilities shall:

Perform all required safety evaluations to determine whether a situation involves a USQ:
- Prior to implementation of a proposed action, obtain PSO approval for situations determined to involve a USQ or a TSRs change; and
- Develop and implement procedures to govern the need for and the performance of safety evaluations.

A safety evaluation shall be performed for:
- Temporary or permanent changes in the facility as described in the existing safety analysis;
- Temporary or permanent changes in the procedures as described in existing safety analysis; or
- Test or experiments not described in existing safety analysis.

A situation involves a USQ if:
- The probability of occurrence or the consequences of an accident or malfunction of equipment important to safety previously evaluated in the facility safety analysis could be increased;
- The possibility for an accident or malfunction of a different type than any evaluated previously in the facility safety analysis could be created; or
- Any margin of safety, as defined in the bases of the TSRs, could be reduced.

When a contractor identifies information that indicates a potential inadequacy of previous safety analyses or a possible reduction in the margin of safety as defined in the TSRs, the contractor shall:
- Notify the appropriate DOE representative of the situation upon discovery of the information;
- Take action to place the facility in a safe condition until the safety evaluation is completed; and
- Submit the completed safety evaluation prior to removing any operational restrictions.

For all required safety evaluations, a contractor shall:

- Document the basis for the USQ determination;
- Maintain USQ determination documentation for the authorized operating period of the nuclear facility and ensure the complete transfer of all documentation to any subsequent contractor prior to termination of its contract;
- Incorporate into the existing SAR any changes that are needed as a result of the safety evaluation or any action taken.

Question: An Unreviewed Safety Question will exist if one or more special conditions exist. What are some of the indications of an Unreviewed Safety Question?

Preferred Response:

1) The probability of an occurrence or the consequences of an accident or malfunction of equipment important to safety as previously evaluated in the facility safety analyses could be increased.
2) The possibility for an accident or malfunction of a different type than any evaluated previously in the facility safety analyses could be created.
3) Any margin of safety as defined in the bases of the TSRs could be reduced.

(Ref: DOE 5480.21)

c. Demonstrate a working level knowledge of the purpose, scope, and application of applicable DOE Orders and Acts:

Background:

| Act or Law | Purpose | Overview |
|---|---|---|
| RCRA | To provide for control of hazardous wastes by imposing requirements on generators, transporters, and facilities | Applies mainly to active facilities and not abandoned or inactive sites |
| CERCLA | To provide funding and enforcement authority for hazardous waste sites | Allows clean up of hazardous waste sites and response to hazardous substance spills |
| TSCA | To identify and evaluate potential hazards | Regulates the production, use, distribution, and disposal of hazardous substances |
| CWA | To improve the quality of surface water | Sets effluent standards, water standards, discharge permit program; provides for special problems, and for a loan program for publicly owned treatment works |

| Act or Law | Purpose | Overview |
|---|---|---|
| CAA | To protect air resources and protect public health | Protects air resources, sets up national research assistance to state and local programs, and assists in developing regional prevention and control programs |
| NEPA | To establish national environmental policy and goals | Provides a process for implementing within federal agencies |
| SDWA | To regulate drinking water systems | Sets national standards for contaminants in drinking water |
| AHERA | To control asbestos in public schools and to determine asbestos problems in public and commercial buildings | Establishes a comprehensive framework for inspection, management, planning, operations, and maintenance activities, and appropriate abatement activities |
| EPA Implementing Regs. DOE Order 451.1, 09-11-95 | To establish DOE internal requirements for NEPA | Ensures efficient and effective implementation of DOE's NEPA responsibilities |

(Ref: Individual Acts and Orders)

Question: What is the purpose of the Clean Air Act (CAA)?

Preferred Response: To protect the health of the public and the environment. (Ref: Clean Air Act)

Background: According to the Resource Conservation and Recovery Act (RCRA), the definition of an empty container may differ from the common conception of one. This is due to the amounts of residual hazardous wastes that can remain in the container. But according to 40 CFR 261, the following may be used to define "an empty container":

Residues of hazardous waste in empty containers.

(a)(1) Any hazardous waste remaining in either (I) an empty container or (ii) an inner liner removed from an empty container, as defined in paragraph (b) of this section, is not subject to regulation under parts 261 through 265, or part 268, 270 or 124 of this chapter or to the notification requirements of section 3010 of RCRA. (2) Any hazardous waste in either (I) a container that is not empty or (ii) an inner liner removed from a container that is not empty, as defined in paragraph (b) of this section, is subject to regulation under parts 261 through 265, and parts 268, 270, and 124 of this chapter and to the notification requirements of section 3010 of RCRA.

> (b)(1) A container or an inner liner removed from a container that has held any hazardous waste, except a waste that is a compressed gas or that is identified as an acute hazardous waste listed in Secs. 261.31, 261.32, or 261.33(e) of this chapter is empty if: (I) All wastes have been removed that can be removed using the practices commonly employed to remove materials from that type of container, e.g., pouring, pumping, and aspirating, and (ii) No more than 2.5 centimeters (one inch) of residue remain on the bottom of the container or inner liner, or (iii)(A) No more than 3 percent by weight of the total capacity of the container remains in the container or inner liner if the container is less than or equal to 110 gallons in size.

Question: An empty container, as defined under the Resource Conservation and Recovery Act, is one that _____.

Preferred Response: Has been voided of all material that can be pumped, poured, or otherwise removed with no more than 1 inch of product remaining. (Ref: 40 CFR 261.7)

Question: The maximum volume of nonacutely hazardous waste that may be stored in a Resource Conservation and Recovery Act Satellite Accumulation Area is _____ gallons.

Preferred Response: 55. (Ref: 40 CFR 264.34)

Question: How often must Resource Conservation and Recovery Act Satellite Accumulation Areas be inspected?

Preferred Response: Weekly. (Ref: 40 CFR 262.34)

Scenario: A polychlorinated biphenyl (PCB) transformer is being drained of oil that is 550 parts per million (ppm) PCB. Work gloves were used during the project. When the gloves were characterized, they were found to contain 3 ppm PCB.

Question: What is the regulatory status of the work gloves?

Preferred Response: PCB waste contaminated at 550 ppm. (Ref: 40 CFR 761)

d. Demonstrate a working level knowledge of the purpose, scope, and application of applicable DOE Orders: DOE O 425.1, *Startup and Restart of Nuclear Facilities*.

Background: DOE O 425.1, *Startup and Restart of Nuclear Facilities*, and has the following as its objective:

> To establish the requirements for start-up of new nuclear facilities and for the restart of existing nuclear facilities that have been shut down. The requirements specify a readiness review process that shall, in all cases, demonstrate that it is safe to start up (or restart) the applicable facility. The facility shall be started up (or restarted), only after independent reviews of readiness have been

conducted and the documented approvals specified in this Order have been received. The readiness reviews are not intended to be tools of line management to confirm readiness. Rather, the readiness reviews provide an independent review of readiness to start or restart operations.

DOE line management shall determine (and ensure that contractor management determines) if Operational Readiness Reviews are required for start-up of new nuclear facilities or restart of a nuclear facility using the requirements given below. DOE shall conduct (and ensure that contractors conduct) an Operational Readiness Review in accordance with this Order when any of the following conditions occur: (a) Initial start-ups of new hazard categories 1, 2, and 3 nuclear facilities. (b) Restart after a nuclear facility unplanned shutdown directed by a DOE management official for safety or other appropriate reasons. (c) Restart after an extended shutdown for hazard categories 1 and 2 nuclear facilities. Extended shutdown for a hazard category 1 nuclear facility is 6 months. Extended shutdown for a hazard category 2 nuclear facility is 2 months. (d) Restart of hazard categories 1 and 2 nuclear facilities after substantial process, system, or facility modifications that require changes in the safety basis previously approved by DOE. (e) Restart after a nuclear facility shutdown because of operations outside the safety basis.

Operational Readiness Review Teams

DOE line management shall appoint (and ensure that contractor management appoints) Operational Readiness Review teams in accordance with the following qualifications and training requirements:

1. Technical knowledge of the area assigned for evaluation, including experience working in the technical area.
2. Knowledge of performance-based assessment processes and methods.
3. Knowledge of facility-specific information.

DOE Elements

Except for the exclusions in paragraph 3c, this Order applies to all nuclear facilities classified as hazard categories 1, 2, or 3.

Authorization Authority

For nuclear facility start-up or restart actions, the authorization authority for start-up or restart approval shall be determined by the following.

For initial start-ups of new hazard categories 1 and 2 nuclear facilities, the Secretary of Energy (or designee) shall approve start-up. For initial start-ups of new hazard category 3 nuclear facilities, the Secretarial Officer (or designee) shall approve start-up.

For extended shutdowns of hazard category 1 nuclear facilities, the Secretarial Officer shall approve restart. For extended shutdowns of hazard category 2 nuclear facilities, the Secretarial Officer (or designee) shall approve restart.

Requirements Applicable to Start-ups or Restarts of Nuclear Facilities Involving Operational Readiness Reviews (These requirements are listed sequentially.)

Operational Readiness Review Documentation. For Operational Readiness Reviews, DOE line management shall require contractors to prepare the following documents: Start-up/restart notification reports, plans-of-action, Operational Readiness Reviews Implementation Plans, and final reports. DOE line management shall prepare its plans-of-action, Operational Readiness Review Implementation Plans, and final reports. The resolution of all findings from the Operational Readiness Reviews shall be documented and maintained with the plans-of-action, Implementation Plans, and final reports.

Approval

The start-up or restart authority, as designated by the Operations Office Manager (or designee) may approve the start-ups or restarts after any prestart findings are corrected.

Question: The Operational Readiness Review team member qualifications include _____.

Preferred Response: Knowledge of performance-based assessment processes and methods and technical knowledge of the subject area.

Question: The purpose of an Operational Readiness Review or Readiness Assessment is to _____.

Preferred Response: Verify the readiness of the facility to start-up or restart independently of line management.

Question: The purpose of the contractor's Operational Readiness Review can best be stated as "The facility to be started up _____."

Preferred Response: Is constructed in accordance with the approved design and can be operated safely.

Question: DOE O 425.1, *Startup and Restart of Nuclear Facilities*, requires an Operational Readiness Review for nuclear facilities on which of the following?

Preferred Response: Initial start-ups of new hazard category 1, 2, and 3 nuclear facilities.

Question: DOE O 425.1, *Startup and Restart of Nuclear Facilities*, requires that if a hazard category 2 facility is shut down after an extended period (more than 12 months), it can be authorized for restart after the appropriate Operational Readiness Review has been satisfactorily completed by _____.

Preferred Response: The cognizant Program Secretarial Officer.

Question: The formal prerequisite document that initiates the contractor and DOE Operational Readiness Review process is the _____.

Preferred Response: Contractor line management readiness to start-up/restart notification to DOE.

Question: The person who makes the final certification that a nuclear facility is approved for start-up is the _____.

Preferred Response: DOE start-up authority. (Ref: DOE O 425.1)

e. Demonstrate a working level knowledge of the purpose, scope, and application of applicable DOE Orders: DOE Order 5480.19, *Conduct of Operations Requirements for DOE Facilitie*s.

Background: It is imperative that equipment and systems in a DOE facility be properly controlled. Not only must the operating shift be aware of how equipment and systems will function for operational purposes, but in order to satisfy the design bases and the operational limits, the proper component, equipment, and system configurations must be established and maintained. DOE facilities are required to establish administrative control programs to handle configuration changes resulting from maintenance, modifications, and testing activities.

Typically, changes in equipment and system configuration are to be communicated from shift to shift through the shift turnover process or through an equivalent method of controlling status. Turnover checklists and equipment status boards are often used as aids for compiling and transmitting status information efficiently and accurately. Control over equipment and system status should be established in accordance with a formal guidance to ensure that proper configuration is maintained.

This guidance should include instructions for system alignments, locking of components, verification of technical specification compliance prior to plant operating-mode changes, authorization prior to removing or restoring equipment to service, and identification and documentation of equipment deficiencies.

Locks and tags should be used on those components that require special administrative control for safety or other reasons. Locks and Tags provide some security that a component will be operated only by authorized facility personnel performing required evolutions in a controlled fashion.

Additionally, Locks and Tags should alert the operator of the importance of the component and remind him/her that special controls over repositioning are to be maintained. In this respect, all personnel should receive training regarding their responsibilities concerning the manipulation of locked or tagged controls.

The purpose is to provide a method for equipment status control through component tagging or locking that should protect personnel from injury, protect equipment from damage, maintain operability of plant systems, and maintain the integrity of the physical boundaries of plant systems. If there is a potential for equipment damage or injury during equipment operation, servicing, maintenance, or modification activities due to inadvertent activation of equipment, a facility Lockout/Tagout program should be established and used. The Lockout/Tagout program should provide for independent verification of the removal from service and the restoration to service of safety-related and other facility equipment.

Lockout is the application of a lock on a control to render the control inoperative. Locks may be built into the switch or be external locks (e.g., padlocks) that may be affixed and or removed when necessary. Keys and/or combinations for Locks are controlled. Other devices (such as wiring a control inoperable, placing control defeating devices, etc.) may also constitute a lesser degree of Lockout. Tagout is the application of a danger or warning device on the control, which indicates that the control is not to be used except under conditions indicated by the tag. Tags should be placed on the control that is tagged out, or as close as possible to clearly indicate the condition.

Question: Equipment locks and tags are installed to _____.

Preferred Response: Prevent inadvertent activation under special conditions of operations, maintenance, or modifications. (Ref: DOE Order 5480.19)

Background: An effective Lockout/Tagout program should be developed by each facility and should include detailed administrative procedures, training of personnel, and uniquely identifiable tags. The program should also exercise appropriate control over Lockout/Tagout preparation, approval, placement, and removal; provide for adequate documentation; and be consistent with the requirements of 29 CFR 1910.

Question: What is required before installation of Lockout/Tagout devices?

Preferred Response: The supervisor responsible for the operation and status of the equipment must authorize it. (Ref: DOE Order 5480.19)

Background: Caution tags should not be used for personnel protection (i.e., caution tags should not be used where it is appropriate to use a Lockout or Tagout devise). Administration of caution tags could, however, be accomplished as part of the Lockout/Tagout program or it could be covered separately. The use of caution tags should be restricted to those situations in which a component or system is functional, but when some precaution or item(s) of information is necessary prior to

operation.
Question: Caution tags are used to _____.

Preferred Response: Provide information or instructions to protect plant equipment.
(Ref: DOE Order 5480.19)

Question: Danger tags are used to _____.

Preferred Response: Indicate a hazardous condition and help prevent injury to personnel.
(DOE Order 5480.19)

Background: When the person who applied the Lockout/Tagout device is not available to remove it, that device may be removed under the direction of the appropriate supervisor/manager, provided that specific procedures and training for such removal have been developed and incorporated into the facility program. The supervisor should demonstrate that the specific procedure provides equivalent safety to the removal of the device by the authorized personnel who applied it.

Scenario: The sole Lockout/Tagout holder for a lockout of the #1 diesel generator cannot be contacted. The diesel was scheduled to be returned to service by the next shift. The Shift Manager decides to approve an emergency Lockout/Tagout release in order to cut the locks. Since you are in the control room looking at logs, the Shift Manager asks if you have any problem with his plan.

Question: What is your response?

Preferred Response: Disagree with the plan, since an emergency CANNOT be declared just to meet a schedule. (Ref: DOE Order 5480.19)

Background: Independent verification is the act of checking that a given operation conforms to established operational criteria, as well as checking a component position independently of activities related to establishing the component's position. A comprehensive independent verification program will identify components to be included in the program, define when independent verification is required, and prescribe the methods of performing independent verification.

Similarly, independent auditing of operations should confirm that established operational requirements are met. Because the possibility of mispositioning may be quite remote, or because the effect of a mispositioning may not be significant to safe and reliable operation, not all components require independent verification. Therefore, it is important to identify those components that must be independently verified. Designating systems or components that require independent verification ensures that the program will be consistently applied.

All components in systems that have safety-related functions should be considered for independent verification. However, some components might not need independent verification, if the following criteria have been met:

(1) Mispositioning would not affect system performance.
(2) The mispositioning would be known immediately to an operator.
(3) Significant radiation exposure would be received by the person(s) performing the independent verification.

Question: Give three reasons for not requiring an independent verification.

Preferred Response:

(1) Mispositioning would not affect system performance.
(2) The mispositioning would be known immediately to an operator.
(3) Significant radiation exposure would be received by the person(s) performing the independent verification.

(Ref: DOE Order 5480.19)

Background:

| Guidelines for Control of Emergency Exposures | | |
|---|---|---|
| **Dose Limit** | **Activity Performed** | **Conditions** |
| 5 rems | All | |
| 10 rems | Protecting major property | Where lower dose limit not practicable. |
| 25 rems | Lifesaving or protection of large populations | Where lower dose limit not practicable. |
| 25 rems | Lifesaving or protection of large populations | Only on a voluntary basis to personnel fully aware of the risks involved. |

Question: In an emergency, which of the following is/are justifications to increase exposure limits?

a) To protect major equipment
b) To save a life, directed
c) To save a life, volunteered
d) To avoid spreading dose among other workers

Preferred Response: a, b, and c. (Ref: 10 CFR 835.1302)

Background: Response to Indications

Operators should believe instrument readings and treat them as accurate unless proven otherwise. Ignoring an unusual reading because the operator believes an instrument is faulty can cause abnormal conditions to be undetected. In general, operators should check other indications, if possible, when unexpected readings are observed. Prompt action should be taken to investigate the cause of abnormal or unexpected indications so that prompt corrective action can occur.

When malfunctioning or inaccurate instruments are discovered, they should be appropriately identified to prevent subsequent confusion and instrument and control personnel should be notified to effect repairs. In situations of operator doubt, operators should be instructed to achieve facility, personnel, and environmental safety above facility production.

Scenario: While you are observing control room activities, an alarm is annunciated. The on-duty operator silences the alarm but then goes back to his business. You ask the operator if he knows what caused the alarm and the operator says, "It probably has something to do with maintenance work being performed out in the plant."

Question: Your judgment of this response is _____.

Preferred Response: Unacceptable, because the operator should always believe the instrumentation until proven otherwise. (Ref: DOE Order 5480.19)

Scenario: A potential criticality procedure violation was noted by a DOE employee. The situation was complicated by the contractor's Shift Superintendent and Senior Engineer disputing whether the procedure was violated.

Question: What action should be performed first?

Preferred Response: Verify that the contractor took the appropriate immediate action in response to a suspected criticality incident. (Ref: DOE Order 5480.19)

Question: Define criticality accident.

Preferred Response: A nuclear criticality accident is an unintentional, uncontrolled nuclear fission chain reaction. It can release large amounts of undesirable energy in the form of heat and radiation. The nuclear criticality accident may consist of a single burst of energy after which the reaction is exhausted and shuts itself down; or it may be repetitive, producing a series of energy bursts before the reaction is exhausted and shuts itself down. (Ref: LMES Course Module 1613)

Question: What is one possible pitfall for the Facility Representative regarding the management of an operating contractor?

Preferred Response: Disregarding a contractor's problem because someone else in DOE has responsibility for that area. (Ref: DOE Order 5480.19 and DOE-STD-1063-97)

Question: The continuous air monitor (CAM) in Site Z Facility X has regularly been alarming (spuriously, as best can be determined) over the last three weeks. As you observe the work being conducted, the CAM alarms. The workers, knowing that it has been alarming over the last few weeks, ignore the alarm, suspecting another malfunction, and continue working.

What should you do IMMEDIATELY?

Preferred Response: Stop work, recommend evacuation of the area, and notify the facility and your manager of your actions. (Ref: 10 CFR 835, DOE Order 5480.19, DOE-STD-1063-97, and DOE N 441.3)

Background: Each operator should be capable of correctly interpreting the chemistry or process parameters that he/she is responsible for and be able to provide appropriate, timely, corrective action when required. High air in leakage and poor quality makeup water are examples of conditions that could require operator identification and response.

Question: The National Pollutant Discharge Elimination System monitoring equipment installed at the end of the effluent removal and purification system failed without alarm indications. The failure was identified during routine operator rounds.

What is one action the Facility Representative MUST take regarding this event?

Preferred Response: Verify that the contractor took appropriate actions. (Ref: DOE Order 5480.19)

Background: It is imperative that equipment and systems in a DOE facility be properly controlled. Not only must the operating shift be aware of how equipment and systems will function for operational purposes, but in order to satisfy the design bases and the operational limits, the proper component, equipment, and system configurations must be established and maintained. DOE facilities are required to establish administrative control programs to handle configuration changes resulting from maintenance, modifications, and testing activities.

Typically, changes in equipment and system configuration are to be communicated from shift to shift through the shift turnover process or through an equivalent method of controlling status. Turnover checklists and equipment status boards are often used as aids for compiling and transmitting status information efficiently and accurately. Control over equipment and system status should be established in accordance with a formal guidance to ensure that proper configuration is maintained. This guidance should include instructions for system alignments, locking of components, verification of technical specification compliance prior to plant operating-mode changes, authorization prior to removing or restoring equipment to service, and identification and documentation of equipment

deficiencies.

Question: Which one of the following are true concerning control of equipment and system status?

a) Only locks (not tags) should be used for administrative control.
b) Equipment deficiencies should be noted by facility personnel and identified in the work control system.
c) The operating supervisor is responsible for maintaining proper configuration and should authorize status changes to major equipment and systems.
d) The need for complete alignment of equipment and systems should be based on the level of control that has been maintained over the status of the components.

Preferred Response: b, c, and d. (Ref: DOE Order 5480.19)

Question: If you suspect that criticality safety limits are being violated, what action must be taken initially?

Preferred Response: Stop activities, control the area, and do not attempt to correct anything. (Ref: DOE Order 5480.24, DOE Order 5480.19, and DOE O 420.1)

Background: Radiological control technicians and their supervisors, line supervision, and any worker, through their supervisor, has the authority and responsibility to stop radiological work activities for reasons of inadequate controls, controls not being used, or hold points not being satisfied.

Facility Representatives and supervisors can shut down an operation or process if imminent danger is deemed to exist.

Any employee who observes what is believed to be an unsafe (or life-threatening) situation or condition can issue a stop-work order. Depending on timing, this stop-work order may be issued through his/her own supervisor or the supervisor of the work party.

In the event of an imminent health and safety hazard, identified by facility line management, or operators, or facility health and safety personnel overseeing facility operations, the person who identified the condition should immediately take actions to eliminate or mitigate the hazard. This person should inform the contractor supervisor in charge (or the contracting officer) that operations should cease.

Question: During a routine walkthrough, you overhear instructions being given by a supervisor to an operator that if carried out, could result in severe damage to the equipment being operated and potential danger to the operator and coworkers. What should you do?

Preferred Response: Request that the supervisor suspend the activity until the correct instructions can be agreed upon. (Ref: DOE Order 5480.19)

Background: As on-site representatives of line management, Facility Representatives will "... take such action as may be appropriate, including curtailment and suspension of operations, when, in their opinion, such operations may result in an undue risk to health, safety, or the environment."

Question: An operator reports an unsafe condition to his/her supervisor. The supervisor determines that the condition CANNOT be corrected until the next day. What actions, if any, must be taken by the contractor at this point?

Preferred Response: Control the unsafe condition. (Ref: DOE Order 5480.19)

f. Demonstrate a working level knowledge of the purpose, scope, and application of applicable DOE Orders: DOE O 420.1, *Facility Safety*.

Background: The double contingency principle requires that process designs shall incorporate sufficient control factors of safety so that at least two unlikely, independent, and concurrent changes in the process conditions must occur before a criticality accident is possible. For example, if fissionable material is controlled using any two of the factors (discussed above), a single failure of one of the controls would still result in only a subcritical condition.

Question: The double contingency principle requires that _____.

Preferred Response: At least two unlikely, concurrent, and independent events occur to cause criticality. (DOE O 420.2)

Background: To meet the ANSI-8.3 requirements, the CAAS must immediately detect an accident that would produce 20 rad/minute at 2 meters; and initiate an audible alarm within 0.5 seconds of $ 75 dB but # 115 dB and at least 10 dB above background noise. Testing of the CAAS is required initially as part of the system installation and checkout, monthly, quarterly, and post-maintenance.

Question: What are the required testing frequencies for the criticality alarm system outlined in the American National Standards Institute standards?

Preferred Response: Initial, monthly, quarterly, post-maintenance. (Ref: DOE O 420.1, ANSI 8.3-1997, and ANSI 8.6-1983)

Question: Any new fissile material activity or change to an existing activity must be _____.

Preferred Response: Evaluated, analyzed, and approved for criticality safety.
(Ref: DOE O 420.1, DOE C 420.1, and DOE-STD-3007-93)

g. Demonstrate a working level knowledge of the purpose, scope, and application of applicable DOE Orders: DOE Order 5480.23, *Nuclear Safety Analysis Reports*.

Background: Risk is the probability of an occurrence or of a hazardous event, and the consequence of the occurrence. The first step in a risk analysis is the hazard analysis. Once the hazards have been identified, a frequency (or probability) of occurrence is assigned to the hazard. After estimating the probability of the hazard occurring, the consequence is estimated. The consequence of one event may be more severe than another; therefore, the associated risk of one event will likely be greater than another. (Ref: DOE Order 5480.23)

Safety Analysis means a documented process: (1) to provide systematic identification of hazards within a given DOE operation; (2) to describe and analyze the adequacy of measures taken to eliminate, control, or mitigate identified hazards; and (3) to analyze and evaluate potential accidents and their associated risks.

Question: A primary goal of safety analysis is to _____.

Preferred Response: Analyze and evaluate potential accidents and their associated risks. (Ref: DOE Order 5480.23)

Background: TSRs are those requirements that define the conditions, safe boundaries, and the management or administrative controls necessary to ensure the safe operation of a nuclear facility and to reduce the potential risk to the public and facility workers from uncontrolled releases of radioactive materials or from radiation exposure due to inadvertent criticality. A TSR consists of operating limits, surveillance requirements, administrative controls, use and application instructions, and the bases thereof.

Question: Technical safety requirements include _____.

Preferred Response: Surveillance requirements, administrative controls, and limiting conditions of operation. (Ref: DOE Order 5480.23)

Background: According to DOE Order 5480.23, SARs are to be written using a “graded approach.” This means that the level of analysis and documentation for the facility must be commensurate with:

- The magnitude of the hazards being addressed
- The complexity of the facility and/or systems being relied upon to maintain an acceptable level of risk
- The stage or stages of the facility life cycle for which DOE approval is sought

Question: State the purpose and general content of the Safety Analysis Report and the context in which it is used.

Preferred Response:

*Purpose* - The SAR provides the bases for approval of new facilities and operations, major modifications thereto, and eventual decommissioning; defines and controls the safety bases and commitments; supports DOE and contractor management safety oversight of facilities and operations; and provides the analytical rationale for operations as delineated in the technical safety requirements document.

*General content* - The SAR addresses the following topics:

- Applicable statutes, rules, regulations, and Orders
- Site characteristics
- Facility description and operation, including design of principal structures, components, all systems, engineered safety features (ESFs), and processes
- Hazard analysis and classification of the facility
- Principal health and safety criteria
- Radioactive and hazardous material waste management
- Inadvertent criticality protection
- Radiation protection
- Hazardous material protection
- Analysis of normal, abnormal, and accident conditions
- Management, organizational, and institutional safety provisions
- Procedures and training
- Human factors
- Initial testing, in-service surveillance, and maintenance
- Derivation of TSRs
- Operational safety
- Quality assurance
- Emergency preparedness
- Provisions for decontamination and decommissioning
- Applicable facility design codes and standards

*Context in which the SAR is used* - The SAR is the principal safety basis for decisions to authorize the design, construction, or operation of new nuclear facilities. The broad application of the SAR requirement to all safety hazards (nuclear and nonnuclear) is to ensure comprehensive, integrated, and balanced risk management of all safety and environmental hazards posed by DOE facilities and operations. Contractors, in preparing the SARs, identify how these generic safety requirements apply to the specific facility, and propose commitments for which the contractor will design, build, and operate the facility to ensure facility safety. For existing facilities, the contractor is required to update the current safety analyses to reflect current as-agreed commitments to safety. DOE's review of a facility safety analysis report submitted by an operating contractor is documented in a safety evaluation report.

The following statements are correct regarding requirements of DOE Order 5480.23:

- All safety hazards in a DOE nuclear facility (nuclear and nonnuclear) must be analyzed.
- A "graded approach" is to be used in the level of detail of the accident analysis.
- After submittal and approval, SARs must be kept current and up-to-date.

(Ref: DOE Order 5480.23 and DOE-STD-1027-92)

Background: DOE currently uses a four-category classification system. All facilities are assessed for classification. A facility is determined to be a nonnuclear facility, hazard category 3, hazard category 2, or hazard category 1. The common element in these definitions is the concept of material at risk.

*Nonnuclear*. DOE-STD-1027, Attachment 1, contains a table entitled "Thresholds for Radionuclides." If a facility contains less than the listed category 3 quantities of radionuclides, it is considered a nonnuclear facility. As a result, the facility is exempt from the requirements of DOE Order 5480.23.

*Category 3*. A facility that meets or exceeds the criteria of the thresholds for radionuclides in DOE-STD-1027 is a hazard category 3 facility. From a practical standpoint, this means the facility has the potential for significant localized consequences; i.e., localized releases of materials in quantities that exceed state and federal reporting requirements. Putting meaning to the numbers, the minimum threshold values from such releases result in less than a 10 rem exposure at 30 meters over a 24-hour period.

*Category 2*. A facility containing hazards that have the potential for significant onsite consequences. From DOE-STD-1027, the threshold values are for an unmitigated release of materials that would result in exposures greater than 1 rem 100 meters from the facility. As a result, category 2 is the level at which emergency planning requirements are invoked.

*Category 1*. This level is primarily reserved for class A reactors. A class A reactor is defined to be a reactor capable of operating at a steady state power level greater than 20 megawatts. A facility may also be classified as category 1 if the Program Secretarial Officer (PSO) deems it necessary. In theory, such a designation would be due to the level of off-site emergency planning required to permit operation of the facility. Currently, HFIR is the only category 1 facility in Oak Ridge. (Ref: DOE Order 5480.23, DOE Order 5480.31, and DOE-STD-1027-92)

Question: A facility is determined to be hazard category 2 when _____.

Preferred Response: The hazard analysis shows the potential for significant on-site consequences. (Ref: DOE Order 5480.23)

Background: The authorization basis of the facility may not be reflected in total in the current facility SAR. For this reason, the language in DOE Order 5480.23 referring to safety analyses is intended to mean the facility authorization basis. This basis, depending upon the facility, may reside in several different types of documents. These may include not only the facility SAR, but also historical

commitments made by contractors to support modifications and the imposition of new DOE requirements or administrative changes. These may also include DOE safety evaluation reports that modify contractor-proposed changes or analyses. The intent of this Order is to preserve the authorization basis, and, if this basis is not reflected in total in the SAR, the contractor must define that population of documents comprising the various elements of the authorization basis and must use this defined population of documents as the basis for performing safety evaluations under the requirements of this Order.

Question: The facility authorization basis is described in the _____.

Preferred Response: SAR, hazard classification documents, TSRs, safety evaluation reports, and facility-specific Order commitments.

Question: A safety evaluation would be required for a _____.

Preferred Response: Proposed modification to a facility not described in existing safety analyses. (Ref: DOE Order 5480.23 and DOE Order 5480.21)

h. Demonstrate a working level knowledge of the purpose, scope, and application of applicable DOE Orders: DOE Order 5480.22, *Technical Safety Requirements*.

Background: DOE Order 5480.22 contains the requirement for contractors to prepare TSRs for DOE nuclear facilities. The Order specifies content, scope, and format for TSRs, which are submitted to DOE for approval. The TSRs are sometimes referred to as "technical specifications." Prior to the issuance of DOE Order 5480.22, nonreactor nuclear facilities operated under Operational Safety Requirements (OSRs). Many facilities in Oak Ridge still use OSRs.

TSRs are a set of requirements that define the conditions, boundaries, and controls necessary to safely operate a nuclear facility. Compliance with TSRs will reduce the potential risk to the public and workers from uncontrolled releases of radioactive material or from radiation exposures due to inadvertent criticality.

Example: When the safety limit on a safety-related pressure vessel has been exceeded, it is said to be a condition that is outside the safe operating envelope (or safety boundaries) for the vessel. (Ref: DOE Order 5480.22 and DOE-STD-3009-94)

Background: A violation of the technical safety requirement has occurred when there is a failure to perform a surveillance within the required time limit. (Ref: DOE Order 5480.22)

Question: A limiting condition of operation contained in a facility TSR specifies that two trains of safety-related equipment be operable. While performing the TSR-required surveillance, one train is discovered to be inoperable and will require maintenance to repair a failed component. What is the immediate action required by the contractor?

Preferred Response: Take remedial actions defined by the action statement associated with the limiting condition of operation. (Ref: DOE Order 5480.22)

i. Demonstrate a working level knowledge of the purpose, scope, and application of applicable DOE Orders: DOE O 440.1A, *Worker Protection Management for DOE Federal and Contractor Employee*s

Background: The objective of DOE O 440.1A is to "establish the framework for an effective worker protection program that will reduce or prevent injuries, illnesses, and accidental losses by providing DOE Federal and contractor workers with a safe and healthful workplace." In issuing the Order, several older Orders were canceled, including DOE Orders 3790.1B, 5480.7A, 5480.9A, 5480.10, 5480.16A, and 5483.1A.

Fundamental elements of the worker protection program include:
- establishing a written program with policy, goals, objectives, and performance measures;
- using qualified staff;
- assigning responsibility and holding personnel accountable;
- encouraging involvement of workers;
- ensuring workers' rights and informing workers of their rights and responsibilities;
- identifying workplace hazards and evaluating risk of injury and illness;
- preventing or abating workplace hazards;
- providing worker protection training;
- and complying with DOE-prescribed worker protection standards.

The requirements in DOE O 440.1 reflect what DOE considers to be the essential elements of a successful worker protection program: management commitment; employee involvement; hazard identification and evaluation; hazard prevention and control; and worker protection training.

Question: What is the measure of the intensity level of sound called?

Preferred Response: Decibel.

Question: According to the Occupational Safety and Health Administration (OSHA), the maximum allowable continuous and impact noise levels are _____.

Preferred Response: 90 dBA and 140 dB peak. (Ref: DOE O 440.1 and 29 CFR 1910.95)

Question: Which nondestructive testing technique presents the most potential harm to the operator?

Preferred Response: Radiography. (Ref: 29 CFR 1910, Subpart G)

Background: Other worker protection posting requirements may be applicable to special situations in specific workplaces. For example, OSHA's confined space standard requires employers to post danger signs or use other equally effective means to inform exposed employees of the existence and location of, and the danger posed by, the confined space. DOE elements and contractors should consult the appropriate OSHA regulations for specific posting requirements.

Scenario: You observe a worker and an attendant exit a confined space for a lunch break, and remain at the work space. No other activity occurs until the worker and attendant return from their lunch break. The worker signs in on the Confined Space Entry Permit and is about to enter the space to return to work.

Question: What would you expect the worker to do?

Preferred Response: Retest the atmosphere before entry. (Ref: DOE O 440.1)

Question: One major element of hazard communication is a _____.

Preferred Response: Written program for the workplace including a list of toxic chemicals present. (Ref: DOE O 440.1 and 29 CFR 1910.1200)

Background:

| Respirator Devices and Their Use | |
|---|---|
| Air-purifying respirators | Protect against specific chemicals and up to specific concentrations. |
| Self-contained breathing apparatus | Provides the highest available level of protection against airborne contaminants and oxygen deficiency. |
| Supplied-air respirators | Protect against most airborne contaminants. |

Question: A breathing device that is not an air-purifying device is the _____.

Preferred Response: Self-contained breathing apparatus. (Ref: DOE O 440.1 and 29 CFR 1910)

Question: Which respirator is allowed to be worn in atmospheres where the hazard is immediate?

Preferred Response: Self-contained breathing apparatus. (Ref: DOE O 440.1 and 29 CFR 1910)

Question: When a worker must be exposed to infrared rays, what is the most effective way to reduce the exposure?

Preferred Response: Personal protective equipment. (Ref: OSHA 3077)

Background: Biohazards are those hazards that may affect workers' health through exposures to body tissues and fluids. These exposures are transmitted by inhalation, ingestion, injection, and/or skin absorption, and include the Human Immuno Virus (HIV) and the Hepatitis B Virus (HBV).

In order that you understand the various limits that apply to exposure, the following are given:

- Time-weighted average - the time-weighted average concentration for a normal 8-hour workday or 40-hour workweek, to which nearly all workers may be repeatedly exposed, day after day, without adverse effect.
- Short-term exposure limit - the maximum concentration to which workers can be exposed for a period of up to 15 minutes continuously without suffering from irritation; chronic or irreversible tissue change; or narcosis of sufficient degree to increase the likelihood of accidental injury, impair self-rescue, or materially reduce work efficiency.
- Recommended exposure limit - time-weighted average concentrations for up to a 10-hour workday during a 40-hour workweek.
- Threshold limit values - refer to airborne concentrations of substances; and is believed to represent conditions under which nearly all workers may be repeatedly exposed, day after day without adverse effect.
- Immediately dangerous to life and health - an atmospheric concentration of any toxic, corrosive, or asphyxiant substance that poses an immediate threat to life or would interfere with an individual's ability to escape from a dangerous atmosphere.
- Protection factor - the level of protection that can be provided by a respirator; a number, that is determined experimentally by measuring face piece seal and exhalation.

"Health hazard" means a chemical, mixture of chemicals, or a pathogen for which there is statistically significant evidence based on at least one study conducted in accordance with established scientific principles that acute or chronic health effects may occur in exposed employees. The term "health hazard" includes chemicals that are carcinogens, toxic or highly toxic agents, reproductive toxins, irritants, corrosives, sensitizers, hepatotoxins, nephrotoxins, neurotoxins, agents that act on the hematopoietic system, and agents that damage the lungs, skin, eyes, or mucous membranes. It also includes stress due to temperature extremes.

Generally, the terms "acute" and "chronic" are used to delineate between effects on the basis of severity or duration. Acute effects usually occur rapidly as a result of short-term exposure and are of short duration. Chronic effects generally occur as a result of long-term exposure and are of long duration.

Controls: When engineering controls do not reduce the associated risk to acceptable levels, they may be supplemented with work practices and administrative controls. Where necessary, these controls may be further supplemented with the use of appropriate personal protective equipment.

Question: Which barrier is the most preferable for worker protection?

Preferred Response: Engineering barriers. (Ref: DOE O 440.1 and 29 CFR 1910.120)

j. Demonstrate a working level knowledge of the purpose, scope, and application of applicable Federal Rules and Industry Codes and Standards.

Scenario: A 50,000-gallon water storage tank has been drained for repair. The nitrogen blanket normally maintained on the tank has been vented. Tank repair requires that a man way cover be removed so that personnel can enter the tank.

Question: What primary precaution should be taken before personnel enter the tank to repair it?

Preferred Response: Prepare and issue a confined space permit. (Ref: 29 CFR 1910.146)

Background: The National Pollutant Discharge Elimination System (NPDES) Program is covered in 40 CFR Part 122. These regulations cover basic EPA permitting requirements, what a state must do to obtain approval to operate its program in lieu of a Federal program and minimum requirements for administering the approved State program, and procedures for EPA processing of permit applications and appeals.

Question: Limits for wastewater discharge from a specific site are prescribed in the _____.

Preferred Response: National Pollutant Discharge Elimination System Permit.

Scenario: The NPDES monitoring equipment installed at the end of the liquid effluent removal and purification system failed without alarm indications. The failure was identified during routine operator rounds.

Question: What is the potential consequence of such a failure?

Preferred Response: Undetected release of toxins to the environment. (Ref: 40 CFR 100 through 136)

Background: Hazardous substance means any substance designated or listed under (A) through (D) of this definition, exposure to which results or may result in adverse effects on the health or safety of employees:

(a) Any substance defined under section 101(14) of CERCLA;
(b) Any biologic agent and other disease-causing agent that after release into the environment and upon exposure, ingestion, inhalation, or assimilation into any person, either directly from the environment or indirectly by ingestion through food chains, will or may reasonably be anticipated to cause death, disease, behavioral abnormalities, cancer, genetic mutation, physiological malfunctions (including malfunctions in reproduction) or physical deformations in such persons or their offspring;

(c) Any substance listed by the U.S. Department of Transportation as hazardous materials under 49 CFR 172.101 and appendices; and
(d) Hazardous waste as herein defined.

Hazardous waste means a waste or combination of wastes as defined in 40 CFR 261.3, or those substances defined as hazardous wastes in 49 CFR 171.8.

Question: Who is responsible for determining whether a solid waste is a hazardous waste?

Preferred Response: The person who generated the waste.

Question: How long is an Occupational Safety and Health Administration notice of violation required to be posted?

Preferred Response: Three working days or until the violation is corrected, whichever is longest. (Ref: 29 CFR 1910.120)

Background: 29 CFR 1910, Subpart L: Fire Protection, contains requirements for fire brigades, and all portable and fixed fire-suppression equipment, fire detection systems, and fire or employee alarm systems installed to meet the fire protection requirements of 29 CFR Part 1910. This subpart applies to all employments except for maritime, construction, and agriculture.

Question: What is the most versatile and dependable form of fire protection available?

Preferred Response: An automatic sprinkler system. (Ref: NFPA codes and standards and 29 CFR 1910)

Background: Fires are broken into classes according to the fuel that is burning. The appropriate extinguisher must be used for each class. Extinguishers are normally labeled for the class of fire that they may be used to extinguish. The classes of fires are:

Class A. Paper, wood, cloth, rubber and/or plastic.

Class B. Flammable liquids such as gasoline, oil, grease, tar, oil-based paint, lacquer and flammable gas.

Class C. Energized electrical equipment including wiring, fuse boxes, circuit breakers, machinery and/or appliances.

Class D. Burning metals, aircraft framework, flares, etc.

Water is the normal extinguishing agent for class A fires. For class B fires, $CO_2$ or one of the halon extinguishers would be used to prevent spreading the burning liquid. For class C, either of the extinguishers used for the class B fires or a dry extinguisher may be used. There are special circumstances of fires involving metals (like phosphorus or magnesium, in aircraft fires) that require an extinguisher called Purple K and other powder extinguishers.

Question: One common cause of fires in the workplace includes _____.

Preferred Response: Using electrical equipment improperly. (Ref: NFPA codes and standards and NFPA 70)

Question: The most desirable agent for extinguishing a fire involving class A material is _____.

Preferred Response: Water.

Question: A fire involving ordinary combustible materials such as paper, wood, cloth, and some rubber and plastic materials is classified as a _____ fire.

Preferred Response: Class A.

Question: Carbon dioxide fire extinguishers are listed for use with _____ classes of fires.

Preferred Response: B and C.

Question: Dry powder extinguishers are normally used on class _____ fires.

Preferred Response: D.

Question: Foam extinguishers are normally used on fires in classes _____.

Preferred Response: A and B.

Question: Which type of extinguisher system should be used where an electrical hazard exists?

Preferred Response: $CO_2$ system.

Background: The primary concept for achieving building fire safety is combining ignition prevention with fire impact control measures. Those substances with low ignition temperatures should be isolated in such a way that, if they do ignite, the fire will cause minimal damage to critical structures/facilities. (Ref: 29 CFR 1926)

The fire protection factors governing structural requirements of a building design are:
1. Number and width of exits provided;
2. Combustibility of interior finish and furnishings;
3. Average number of persons in the building; and
4. Class of occupancy and size of building.

Question: The primary fire protection factors are _____.

Preferred Response: The class of occupancy and size of the building.

Question: The most widely used and accepted means of fire protection at vertical and horizontal openings is _____.

Preferred Response: Fire doors. (Ref: NFPA 101)

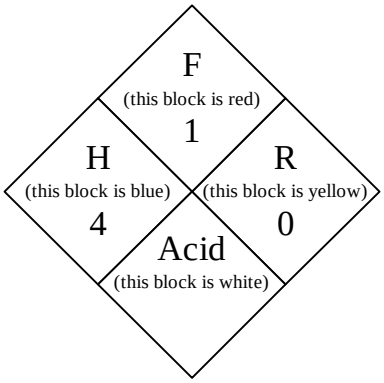


Hazardous Material Classification

F = Flammability
The top diamond is the flammability diamond and has a red background or a white background with red letters.

R =Reactivity
The right diamond is the reactivity diamond and has a yellow background or a white background with yellow letters.

H =Health
The left diamond is the health diamond and has a blue background or a white background with blue letters.

“Special” = Special Characteristics
The bottom diamond is the special characteristics diamond and has a white background with black letters indicating any special characteristics firefighters may need to know (corrosives, acids, oxydizers, etc.).

The numbers indicate the severity of the hazard with 1 being the lowest and 4 the highest. The table below describes the number system:

| **Severity Codes for Hazardous Material Injuries** | | | |
|---|---|---|---|
| **Signal** | **Type of possible injury** | **Susceptibility to burning** | **Susceptibility to release of energy** |
| **4** | Very short exposure could cause death or major residual injury. | Rapidly or completely vaporize at atmospheric pressure and normal ambient temperature, or that will readily disperse in air and will burn rapidly. | Readily capable of detonation or of explosive decomposition or reaction at normal temperatures. |
| **3** | Short exposure could cause serious temporary or residual injury. | Could ignite under almost all ambient temperatures. | Capable of detonation or explosive decomposition or reaction at normal temperatures, but require a strong initiating source or must be heated under confinement or react explosively with water. |
| **2** | Intense or continued but not chronic exposure could cause temporary incapacitation or possible residual injury. | Must be moderately heated or exposed to relatively high ambient temperatures before ignition can occur. | Undergo violent chemical change at elevated temperatures and pressures or react violently with water or may form explosive mixtures with water. |
| **1** | On exposure would cause irritation but only minor residual injury. | Must be preheated before ignition can occur. | Normally stable but can become unstable at elevated temperatures and pressures. |
| **0** | Under fire conditions would offer no hazard beyond ordinary combustible material. | Will not burn. | Normally stable even under fire conditions, and not reactive with water. |

The "Special" diamond at the bottom is used to indicate any special characteristics of the chemical such as acids, corrosives, oxidizers, etc. (Ref: NFPA 704)

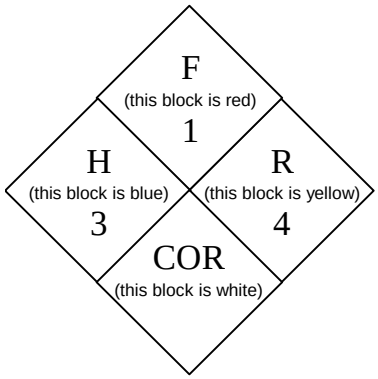


Question: Translate the Flammability, Reactivity, Health, and Special diamonds on the figure above.

Preferred Response: The Flammability is 1, indicating that it must be preheated before it will ignite, the Reactivity is 4, indicating that it is readily capable of detonation or explosive decomposition, the Health is 3, indicating that short exposure could cause serious temporary or residual injury, and the Special indicates it is a corrosive (COR).

Question: For the square containing the "H" in the following hazardous material classification sign, what do the letter and number signify?

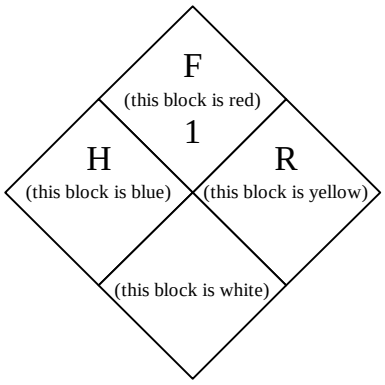


Hazardous Material Classification

Preferred Response: Health hazard, deadly. (Ref: NFPA 704)

Question: For the square containing the "F" in the following hazardous material classification sign, what do the letter and number signify?

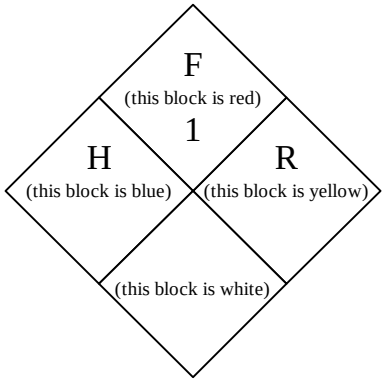


Preferred Response: Fire hazard, flash point above 200° F. (Ref: NFPA 704)

Question: Under the National Fire Protection Association color coding, yellow indicates _____.

Preferred Response: Reactivity. (Ref: NFPA codes and standards and NFPA 101)

Question: The primary concept for achieving building fire safety is _____.

Preferred Response: Combining ignition prevention with fire impact control measures. (Ref: NFPA codes and standards, NFPA 101, 29 CFR 1926, and 29 CFR 1910)

Question: Flammable limits refer to the _____.

Preferred Response: Ratio of vapor-air mixtures that will ignite. (Ref: NFPA codes and standards and 29 CFR 1910.106)

Background:

a) Color identification
   1. Red. Red shall be the basic color for the identification of:
      i. Fire protection equipment and apparatus. [Reserved]
      ii. Danger.
      iii. Stop. Emergency stop bars on hazardous machines shall be red. Stop buttons or electrical switches used for emergency stopping of machinery shall be red.
   2. Yellow.
      i. Yellow shall be the basic color for designating caution and for marking physical such as: Striking against, stumbling, falling, tripping, and "caught in between."

Question: Which of the following color codings would be inappropriate for safety purposes?
a) A bright blue-bordered safety bulletin board
b) A yellow sign on a door to the x-ray lab
c) A bright red cabinet containing maintenance supplies
d) A dark green-bordered safety poster

Preferred Response: c) A bright red cabinet containing maintenance.

Question: What color is used on signs and/or emergency shutoff buttons to signify danger?

Preferred Response: Red.

Question: What color is used on signs to signify caution or physical hazards?

Preferred Response: Yellow. (Ref: 29 CFR 1910.144)

Question: In the control of hazards, the first objective should be _____.

Preferred Response: Eliminating hazards by design or construction. (Ref: 29 CFR 1910.120)

Question: Describe transuranic waste.

Preferred Response: Waste containing radionuclides with a half life > 20 years, atomic number > 92, and a concentration > 100 nCi/gram and is primarily an alpha emitter. (Ref: DOE-HDBK-1019/1-93, 1019/2-93, and 40 CFR 191.02)

k. Demonstrate a working level knowledge of the purpose, scope, and application of applicable DOE Orders and Standards: DOE/EH-256T, *DOE Radiological Control Manual*.

Background: As Low As Reasonably Achievable (ALARA). An approach to radiation protection to control or manage exposures (both individual and collective to the workforce and general public) as low as social, technical, economic, practical, and public policy considerations permit. As used in this Order, ALARA is not a dose limit but a process, which has the objective of dose levels as far below applicable limits of the Order as is reasonably achievable.

The design objectives for personnel exposure from external sources of radiation in continuously occupied controlled areas are NOT to exceed .5 mrem per hour on average and are to follow ALARA concepts.

An ALARA committee is utilized to improve radiological performance by making recommendations to management to minimize radiation exposure and radiological releases. (Ref: DOE Order 5480.11)

Control of radioactive contamination is achieved by using engineering controls. Administrative controls, and worker performance or personnel contamination control practices, are used to contain contamination at the source by reducing existing areas of contamination and promptly decontaminating areas that become contaminated. (Ref: DOE/EH-256T)

Question: An As Low As Reasonably Achievable committee is utilized to improve radiological performance by _____.

Preferred Response: Making recommendations to management to minimize radiation exposure and radiological releases. (Ref: 10 CFR 835)

Background: Personnel shall perform a whole body frisk under the following conditions:
1. Immediately upon entry into an uncontaminated area after exiting Contamination Areas, High Contamination Areas, and Airborne Radioactivity Areas.
2. As directed by the RWP or the Radiological Control Organization.

In addition to the above, personnel exiting a Radiological Buffer Area containing Contamination, High Contamination, or Airborne Radioactivity Areas should, at a minimum, perform a hand and foot frisk. This frisk is optional if the Radiological Buffer Area exit is immediately adjacent to the location where the exiting worker has already performed a whole body frisk.

Where frisking cannot be performed at the exit from Contamination Areas, High Contamination Areas, or Airborne Radioactivity Areas due to high background radiation levels, personnel shall:

1. Remove all protective equipment and clothing at the exit.

2. Proceed directly to the nearest designated monitoring station.

3. Conduct a whole body frisk.

4. Personnel frisking shall be performed after removal of protective clothing and prior to washing or showering.

Question: What shall personnel do when frisking CANNOT be performed at the exit from Contamination Areas, High Contamination Areas, and Airborne Radioactivity Areas due to high background radiation levels?

Preferred Response: Remove all protective equipment and clothing at the exit, proceed directly to the nearest designated monitoring station, and conduct a whole body frisk.
(Ref: DOE/EH-256T and 10 CFR 835)

Background: Minimum requirements for unescorted entry into High Contamination or Airborne Radioactivity Areas shall include the following:

- Radiological Worker II training.
- Worker's signature on the RWP.
- Protective clothing and respiratory protection when specified by the RWP.
- Pre-job briefing for High Contamination or Airborne Radioactivity Areas, as applicable.
- Personnel dosimetry, as appropriate.

Question: What are the minimum requirements for unescorted entry into high radiation areas?

Preferred Response: Radiological Worker II Training, a worker's signature on the RWP, personnel and supplemental dosimeters, and survey meters. (Ref: DOE/EH-256T)

| **Summary of Dose Limits/Type of Exposure** | | |
|---|---|---|
| Radiological Worker (general employees with unescorted access to radiological areas). | Whole body (internal+external) | 5 rem |
| | Lens of eye | 15 rem |
| | Extremities (hands, arms below elbows, feet, legs below knee | 50 rem |
| | Any organ or tissue (other than lens of eye) and skin | 50 rem |
| Declared pregnant worker | Embryo/fetus | .5 rem per gestation period |
| Minors and students (under 18) | Whole body (internal+external) | .1 rem |
| Visitors and public (no training) | Whole body (internal+external) | .1 rem |

(Ref: DOE/EH-256T)

The dose rate (dr) from a point source of radiation (Pt) can be determined by the formula

$$dr = Pt/d^2$$

For a given dose rate, when the distance from the point source (Pt) is doubled, the dose rate will decrease by 1/4. (Ref: DOE-HDBK-1019/1-93 and 2-93).

Scenario: A Facility Representative will be working in a room that contains a single-point source of gamma radiation. A distance of 20 feet will be maintained from the radiation source. The posted survey for the room indicates 200 mrem/hr at a distance of 10 feet from the source.

Question: What should you expect the dose rate to be at the work location?

Preferred Response: 50 mrem/hr.

With a given dose rate, the stay time can be calculated by dividing the dose rate by the maximum desired (or allowed) exposure.

Time = Dose Rate/Maximum exposure

Question: How long can an individual work at a location with a dose rate of 100 mrem/hr without exceeding a dose of 25 mrem?

Preferred Response: 15 minutes. (Ref: DOE/EH-256T and 10 CFR 835)

Background: Control of radioactive contamination is achieved by using engineering controls. Administrative controls, and worker performance or personnel contamination control practices, are used to contain contamination at the source by reducing existing areas of contamination and promptly decontaminating areas that become contaminated.

Question: What is the proper disposition of a tool that is determined to have a fixed surface contamination above detectable levels?

Preferred Response: The tool may be used in radiologically controlled areas under appropriate controls. (Ref: DOE/EH-256T)

Background: The RWP is an administrative mechanism used to establish radiological controls for intended work activities. The RWP informs workers of area radiological conditions and entry requirements and provides a mechanism to relate worker exposure to specific work activities. The RWP should include the following information:

1. Description of work
2. Work area radiological conditions
3. Dosimetry requirements
4. Pre-job briefing requirements, as applicable
5. Training requirements for entry
6. Protective clothing and respiratory protection requirements
7. Radiological Control coverage requirements and stay time controls, as applicable
8. Limiting radiological conditions that may void the RWP
9. Special dose or contamination reduction considerations
10. Special personnel frisking considerations
11. Technical work document number, as applicable
12. Unique identifying number
13. Date of issue and expiration
14. Authorizing signatures

Job-specific RWPs shall be used to control nonroutine operations or work in areas with changing radiological conditions. The job-specific RWP shall remain in effect only for the duration of the job.

General RWPs may be used to control routine or repetitive activities, such as tours and inspections or minor work activities, in areas with well-characterized and stable radiological conditions. General RWPs should not be approved for periods longer than 1 year.

Question: The two types of Radiological Work Permits are:

Preferred Response: General and job specific. (Ref: DOE/EH-256T and 10 CFR 835)

Question: The steps involved in responding to a spill of radioactive liquid include:

Preferred Response:
1. Stopping the spill,
2. Warning others,
3. Isolating the area,
4. Minimizing exposure, and
5. Securing ventilation, if appropriate.

Background: Access training is required for all workers to enter a Controlled Area unescorted. The minimum requirements for High Radiation Areas are Radiological Worker I Training, a worker's signature on the RWP, personnel and supplemental dosimeters, and survey dosimeters.

Dose limits information and requirements can be found in Chapter 2, Radiological Standards, Part 1, Administrative Control Levels, and Dose Limits, Articles 211-216.

Administrative control levels are established well below regulatory dose limits to help reduce individual and total worker population radiation dose. A DOE Administrative Control level of 2.0 rem per year per person is established for all DOE activities. The Oak Ridge site administrative control level for whole body radiation dose is 1.0 rem/year. Increasing levels of authority are required to approve higher administrative control levels.
The administrative control level for cumulative dose listed in DOE N 441.3 for whole body radiation dose is (1 X age) R. (Ref: DOE N 441.3 and 10 CFR 835)

Question: Which of the following actions should you take if a self-reading dosimeter shows an irregular or off-scale reading while you are in a radiological area?

Preferred Response: Alert others, leave the area, and notify Radiological Control. (Ref: DOE/EH-256T)

Question: Starting at what depth must trenches be shored, sheeted, braced, or sloped?

Preferred Response: Five feet. (Ref: 29 CFR 1926)

Question: OSHA requires that wire ropes or cable be inspected how often during use?

Preferred Response: Daily. (Ref: 29 CFR 1910 and 29 CFR 1910.184)

Background: As a component of the quality assurance program (QAP), assessments of the facility personnel, processes, and products encompass management assessments independent assessments, and self-assessments. Inherent with overall quality improvement (also a component of the QAP), self-monitoring is an essential activity for the facility's continuous oversight of its operations and how well it is achieving its goals and objectives.

Question: A management assessment focuses primarily on which of the following?

Preferred Response: Identifying customer expectations and the degree to which they are met. (Ref: 10 CFR 830.120, DOE Order 5700.6C, and ANSI/ASME NQA)

Background: *Purpose* - The QAP is established by an organization to assign responsibilities and authorities, to define policies and requirements, and to provide for the performance and assessment of work. The QAP ensures that risks and environmental impacts are minimized and that safety, reliability, and performance are maximized through the application of effective management systems commensurate with the risks posed by the facility and its work. The QAP must fulfill the following 10 criteria:

| **Quality Assurance Program Criteria** | | |
|---|---|---|
| **Criterion #** | **Criterion Title** | **Description** |
| 1 | Program | Organizations shall develop, implement, and maintain a written quality assurance program. |
| 2 | Personnel Training and Qualification | Personnel shall be trained and qualified to ensure that they are capable of performing their assigned work. |
| 3 | Quality Improvement | The organization shall establish and implement processes to detect and prevent quality problems and to ensure quality improvement. |
| 4 | Documents and Records | Documents shall be prepared, reviewed, approved, issued, used, and revised to prescribe processes, specify requirements, or establish design. |
| 5 | Work Processes | Work shall be performed to established technical standards and administrative controls. |

| Quality Assurance Program Criteria | | |
|---|---|---|
| **Criterion #** | **Criterion Title** | **Description** |
| 6 | Design | Items and processes shall be designed using sound engineering/scientific principles and appropriate standards. |
| 7 | Procurement | The organization shall ensure that procured items and services meet established requirements and perform as specified. |
| 8 | Inspection and Acceptance Testing | Inspection and acceptance testing of specified items and processes shall be conducted using established acceptance and performance criteria. |
| 9 | Management Assessment | Management at all levels shall periodically assess the integrated quality assurance program and its performance. |
| 10 | Independent Assessment | Planned and periodic independent assessments shall be conducted to measure item quality and process effectiveness and to promote improvement. |

(Ref: DOE Order 5700.6C and ANSI/ASME NQA-1)

Question: The 10 basic requirements (criteria) in ASME NQA-1 can be grouped under the three headings _____.

Preferred Response: Management, performance, and assessment. (Ref: ASME NQA-1)

2. References

   a. DOE-STD-1063-97, *Establishing and Maintaining a Facility Representative Program at DOE Nuclear Facilities.*

   b. DOE 5480.21, *Unreviewed Safety Questions*, Sections 6.b, 7.a, and 10.

   c. Clean Air Act.

   d. 40 CFR 261.7(b), “Identification and Listing of Hazardous Waste.”

   e. 40 CFR 264.34(c), “Standards for Owners and Operators of Hazardous Waste Treatment, Storage, and Disposal Facilities.”

   f. 40 CFR 262.34, “Standards Applicable to Generators of Hazardous Waste.”

   g. 40 CFR 761, “PCBs.”

h. DOE O 425.1, *Startup and Restart of Nuclear Facilities*.

i. DOE Order 5480.19, *Conduct of Operations Requirements for DOE Facilities*, Attachment I, Chapters II.C.6, VIII, IX, and X.C.1.a.

j. DOE O 420.1 and Change 2, *Facility Safety*.

k. 10 CFR 835, "Occupational Radiation Protection."

l. DOE N 441.3, *Radiological Protection for DOE Activities*.

m. DOE Order 5480.24, *Nuclear Criticality Safety*.

n. ANSI 8.3-1997, *Criticality Accident Alarm System*.

o. ANSI 8.6-1983 (R1995), *Safety in Conducting Subcritical Neutron Multiplication Measurement In Situ*.

p. DOE-STD-3007-93, *Guidelines for Preparing Criticality Safety Evaluations at Department of Energy Non-Reactor Nuclear Facilities.*

q. DOE Order 5480.23, *Nuclear Safety Analysis Reports*.

r. DOE-STD-1027-92, *Hazard Categorization and Accident Analysis Techniques for Compliance with DOE Order 5480.23, Nuclear Safety Analysis Reports*.

s. DOE-STD-3009-94, *Preparation Guide for U.S. DOE Nonreactor Nuclear Facility Safety Analysis Reports*.

t. DOE Order 5480.22, *Technical Safety Requirements*.

u. DOE O 440.1, *Worker Protection Management for DOE Federal and Contractor Employees*.

v. 29 CFR 1910.95, 1910.106, 1910.120, 1910.144, 1910.146, 1910.184, 1910.1200, Subparts G, I, L, and N, "Occupational Safety and Health Standards."

w. OSHA 3077, 1994, "PPE."

x. 40 CFR 100 through 136, "Protection of Environment."

y. NFPA codes and standards.

z. NFPA 70, *National Electrical Code*.

aa. 29 CFR 1926, "Safety and Health Regulations for Construction."

bb. NFPA 101, *Life Safety Code*.

cc. NFPA 704, *Standard for the Identification of the Fire Hazards of Materials for Emergency Response*.

dd. DOE-HDBK-1019/1-93 and 1019/2-93, DOE Fundamentals Handbook, *Nuclear Physics and Reactor Theory*, Volumes 1 and 2.

ee. 40 CFR 191.02, "Environmental Radiation Protection Standards for Management and Disposal of Spent Nuclear Fuel, High-Level and Transuranic Wastes."

ff. DOE Order 5480.11, *Radiation Protection for Occupational Workers*.

gg. DOE/EH-256T, *DOE Radiological Control Manual*.

hh. 10 CFR 830.120, "Nuclear Safety Management."

ii. DOE Order 5700.6C, *Quality Assurance*.

jj. ANSI/ASME NQA-1, *Quality Assurance Requirements for Nuclear Facility Applications*.

kk. LMES Course Module 1613.

**Responsibility Area 3.0 - Administrative**

Competency 3.1: A Facility Representative shall demonstrate a working level knowledge of the purpose, scope, and application of applicable DOE Orders.

1. Supporting Knowledge and Skills

   a. Describe the Facility Representative's role in contractor oversight.

   Background: The relationship between the Facility Representative and the facility operator should be clearly defined and understood by both parties. Facility Representatives occupy a unique position in the transmission of information between DOE and its contractors. Facility Representatives should be able to communicate effectively with all levels of the contractor organization. They should be familiar with the contractor chain of command for facility operations. However, the Facility Representative should not become subverted to the contractor's interests nor simply verify compliance with DOE requirements. Facility Representatives should represent DOE to the contractor and ensure the contractor carries out DOE policies. In defining the relationship between a Facility Representative and contractor, the following points are emphasized:

   1. The Facility Representative is part of DOE line management.

   2. The contractor is responsible for the safe and efficient operation of the facility. The contractor is accountable to DOE to perform its operations in a manner that ensures the safety and health of personnel and protection of the environment. Any Facility Representative action or inactivity cannot diminish the contractor's responsibility.

   3. The Facility Representative is responsible for ensuring that the contractor is operating the facility in a safe and efficient manner.

   4. The responsibility for identifying and correcting deficiencies rests with the operating contractor. The contractor shall never rely on the Facility Representative to identify or correct deficiencies.

   5. All Facility Representative's requests for action should go through the established chains of command, with the exception of a "stop work" order.

   Question: What is the primary function of the DOE Contracting Officer Representative?

   Preferred Response: DOE Contracting Officer Representative serves as the DOE primary point of contact with the Contractor Facility Manager for day-to-day operations.
   (Ref: DOE-STD-1063-93)

   Question: Describe DOE's expectations for the contractor.

Preferred Response: DOE's expectation for the contractor's performance goals is best characterized as a set of goals that are:
C Auditable
C Measurable
C Challenging
(Ref: FAR Part 917.6)

Background: The concept of performance-based contracting is centered on a contract instrument that defines performance expectations in terms of outcomes or results as opposed to methods, processes, systems, or broad categories of work activity. To the maximum extent possible, it describes the work in terms of what is to be the required output rather than how the work is to be accomplished.

The new form of contract requires clearly stated, results-oriented performance criteria and measures. Appropriate incentives are created to motivate contractors to meet or exceed higher levels of performance than have been expected in the past. Provisions may be included that create specific incentives for cost savings and improved financial accountability.

Question: Performance-based environmental, safety, and health incentives should be focused on what?

Preferred Response: Program integration and critical environmental, safety, and health performance. (Ref: *DOE Performance-Based Contracting Guide*)

Background: The fundamental principle of the DOE award fee type contract is to reward or penalize contractors for performance above or below an established norm. Assessments are usually performed on a periodic basis to determine the performance of the contractor measured against predetermined performance measures. How well the contractor is performing (or the quality of the performance) is the basis for the award fee in that particular area. Quality is defined as the degree to which an item or process meets or exceeds the user's requirements and expectations

Question: The award fee process permits input from which of the following?

Preferred Response: All persons associated with the area of concern. (Ref: DOE O 542.1, FAR 916.4, 10 CFR 830.120, and ASME NQA-1-1989)

Background: The role of Facility Representatives in contract administration is characterized in the list below:
1. Provide periodic input on achievements, deficiencies, and concerns to the DOE line management.
2. Advise the contractor of achievements, deficiencies, and concerns when they are observed by the Facility Representatives during their normal duties.
3. Monitor the contractor response to deficiencies and concerns to see if corrective actions are being taken.

(Ref: DOE-STD-1063-97)

Question: Which activity will help the contractor monitor its progress in meeting goals that improve operational performance and effectiveness?

Preferred Response: Self-assessments. (Ref: 10 CFR 830.120)

2. References

   a. DOE-STD-1063-93, *DOE Standard Establishing and Maintaining a Facility Representative Program at DOE Facilities*, Section 5.7.

   b. FAR Part 917.6.

   c. *DOE Performance-Based Contracting Guide* (Draft), December 1997.

   d. DOE O 542.1.

   e. FAR 916.4.

   f. 10 CFR 830.120.

   g. ASME NQA-1-1989, *Quality Assurance Program Requirements for Nuclear Facilities.*

   h. DOE-STD-1063-97, *Establishing and Maintaining a Facility Representative Program at DOE Facilities*, 5.2.

Competency 3.2: A Facility Representative shall demonstrate a familiarity level knowledge of the training and qualification requirements for nuclear facility operations personnel.

1. Supporting Knowledge and Skills

   a. Describe the five elements of a systematic approach to training.

      Background: DOE Handbook, DOE-HDBK-1078-94, *A Systematic Approach to Training*, is organized into a series of sections, with each section representing one of the phases of the Systematic Approach to Training (SAT) model. Training that is conducted efficiently and effectively and is directly related to the needs of the job (i.e., performance based) is fundamental to safe operations. The Department of Energy endorses a "systematic approach" to training to ensure that all training contains appropriate performance based characteristics. The five elements of a "systematic approach" to training are 1) analysis, 2) design, 3) development, 4) implementation, and 5) evaluation.

      An overview of each of the phases follows:

      1. Analysis - This section addresses three methods of identifying training/performance requirements: needs analysis, job analysis, and task analysis. The major outputs of the analysis phases are a task list for each position, and a task-to-training matrix. The task-to-training matrix identifies the training disposition of the tasks identified in the task list and lists the existing materials that support task performance. Participation of subject matter experts and facility personnel is emphasized throughout the process.

      2. Design - The design phase uses the information collected during the analysis phase to provide a "blueprint" for developing training programs based upon the SAT model. This section of the Handbook addresses methods for writing learning objectives, setting training standards, designing tests, and preparing training plans. The major outputs of the design phase are learning objectives and test items. For existing programs, contractors are encouraged to determine if their learning objectives are appropriate, cover all required content, and include appropriate criteria and conditions.

      3. Development - Development incorporates the results of the design activities. The major outputs of the development phase are the completed lesson plans and training aids.

      4. Implementation - Implementation encompasses taking the results of the development phase into the training setting and conducting the training. The major output of the implementation phase is trained personnel.

      5. Evaluation - Evaluation consists of a periodic review of the training materials and methods of soliciting feedback from former trainees and their supervisors on the effectiveness of training. The major outputs of evaluation are the decisions made to improve the training program during all phases. (Ref: DOE-HDBK-1078-94)

b. Select elements of a contractor training program and assess for compliance and adequacy.

Background: A Training Implementation Matrix that defines and describes the application of the selection, qualification, certification, and training requirements of this Order shall be prepared by the contractor operating organization. The matrix shall clearly define the organization, planning, and administration of the qualification program and set forth the responsibility, authority, and methods for conducting training. Suitable justification for exceptions shall be included in the matrix for any requirement not implemented. At some sites with several facilities, a combined Training Implementation Matrix may be submitted.

Question: In reviewing the records of qualification for a contractor employee, you note that the employee does not have the education required by the contract performance objective for training and qualification. Your judgment of the situation is that:

Preferred Response: You must review the Training and Qualification Plan to determine the contractor's implementation schedule. (Ref: DOE Order 5480.20A and DOE-STD-1070-94)

2. References

a. DOE-HDBK-1078-94, *DOE Training Program Handbook: Systematic Approach*.

b. DOE Order 5480.20A, Chapter I.7.a.(1).

c. DOE-STD-1070-94, Objective 2.1.

**Responsibility Area 4.0 - Management, Inspection, and Oversight**

Competency 4.1: A Facility Representative shall demonstrate a working level knowledge of problem analysis principles and techniques necessary to identify problems, determine potential causes of the problems, and identify corrective action(s).

1. Supporting Knowledge and Skills

   a. Describe and explain the application of problem analysis techniques, including the following:
      - Root Cause Analysis
      - Causal Factor Analysis
      - Change Analysis
      - Barrier Analysis
      - Management Oversight and Risk Tree (MORT) Analysis

      Background: The basic reason for investigating and reporting the causes of operational problems, such as adverse or unplanned events and occurrences, is to enable the identification of corrective actions adequate to prevent recurrence and thereby protect the health and safety of the public, the workers, and the environment. Essential here is the identification of the root cause of the event, which if corrected, will prevent the recurrence of that event. To this end, DOE-NE-STD-1004-92, *DOE Guideline - Root Cause Analysis Guidance Document*, endorsed by DOE O 232.1, describes the most common root cause analysis methods (or techniques):

      *Causal Factor Analysis* - identifies the time sequence of a series of tasks and/or actions and the surrounding conditions leading to an occurrence.

      *Change Analysis* - is used when the problem is obscure. It is a systematic process that is generally used for a single occurrence and focuses on elements that have changed.

      *Barrier Analysis* - is a systematic process that can be used to identify physical, administrative, and procedural barriers or controls that should have prevented the occurrence.

      *Management Oversight and Risk Tree (MORT) Analysis* - is used to identify inadequacies in barriers and controls, specific barrier and support functions, and management functions. It identifies specific factors relating to an occurrence and identifies the management factors that permitted these factors to exist.

      *Human Performance Evaluation* - identifies those factors that influence task performance. The focus of this analysis method is on operability, work environment, and management factors. Man-machine interface studies to improve performance take precedence over disciplinary measures.

*Kepner-Tregoe Problem Solving and Decision Making* - a systematic framework for gathering, organizing, and evaluating information that applies to all phases of the occurrence investigation process. Its focus on each phase helps keep them separate and distinct. The root cause phase is similar to change analysis.

Question: Describe the root cause analysis techniques: Causal Factor Analysis, Change Analysis, Barrier Analysis, and MORT.

Preferred Response: *Causal Factor Analysis* - identifies the time sequence of a series of tasks or actions and the surrounding conditions leading to the occurrence.

*Change Analysis* - a systematic process that is generally used for a single occurrence and focuses on elements that have changed.

*Barrier Analysis* - a systematic process that can be used to identify physical, administrative, and procedural barriers or controls that should have prevented the occurrence.

*MORT Analysis* - is used to identify inadequacies in barriers and controls, specific barrier and support functions, and management functions.

Question: Define root cause.

Preferred Response: The cause that, if corrected, would prevent recurrence of an occurrence. (Ref: DOE-NE-STD-1004-92)

b. Describe and explain the application of the following root cause analysis processes in the performance of occurrence investigations:
   - Events and Causal Factors Charting
   - Root Cause Coding
   - Recommendation Generation

Background: The DOE Handbook - DOE-NE-STD-1004-92, *DOE Guideline - Root Cause Analysis Guidance Document*, as endorsed by DOE O 232.1, describes the five phases common to root cause investigations:

*Phase I. Data Collection.* It is important to begin the data collection phase of root cause analysis immediately following the occurrence identification to ensure that data are not lost. (Without compromising safety or recovery, data should be collected even during an occurrence.) The information that should be collected consists of conditions before, during, and after the occurrence; personnel involvement (including actions taken); environmental factors; and other information having relevance to the occurrence. This includes such investigatory measures as photographing the area, preserving the physical evidence at the scene, and reconstruction of the events leading up to the occurrence.

*Phase II. Assessment.* Any root cause analysis method may be used that includes the following steps:

1. Identify the problem.
2. Determine the significance of the problem.
3. Identify the causes (conditions or actions) immediately preceding and surrounding the problem.
4. Identify the reasons why the causes in the preceding step existed, working back to the root cause (the fundamental reason which, if corrected, will prevent recurrence of these and similar occurrences throughout the facility). This root cause is the stopping point in the assessment phase.

It is during this phase that events and causal factors charting, root cause coding, and recommendation generation occurs. These root cause analysis techniques are described in detail in the guidance document.

*Phase III. Corrective Actions.* Implementing effective corrective actions for each cause reduces the probability that a problem will recur and improves reliability and safety.

*Phase IV. Inform.* Entering the report on the Occurrence Reporting and Processing System (ORPS) is part of the inform process. Also included is discussing and explaining the results of the analysis, including corrective actions, with management and personnel involved in the occurrence. In addition, consideration should be given to providing information of interest to other facilities.

*Phase V. Follow-up.* Follow-up includes determining if corrective action has been effective in resolving problems. An effectiveness review is essential to ensure that corrective actions have been implemented and are preventing recurrence.

Question: Why is it important to begin the data collection process as soon as possible after the occurrence?

Preferred Response: To ensure that data are not lost.

c. Describe the following types of investigations and discuss an example of the application of each:
   - Type A
   - Type B
   - Type C

Background: DOE field elements shall categorize the type of investigation in accordance with the algorithm in DOE O 225.1, *Accident Investigations*, to determine if a Type A or Type B investigation is required. Categorization of all Type A and Type B accident investigations shall be reported in a timely manner to the Office of the Deputy Assistant Secretary for Oversight (EH-2). Categorization shall be made expeditiously, taking into account that timeliness is crucial to

conducting an accurate investigation, preserving the accident scene and evidence, and identifying causal factors. Note: DOE O 225.1A eliminates the requirement for Type C investigations previously defined in DOE 5484.1, Change 7. However, Type C investigations, while not mandatory, will be conducted when requirements from DOE 5484.1 remain specified in existing contracts.

A Type A investigation is conducted for the more serious accidents and is appointed and managed by the Office of the Assistant Secretary for Environment, Safety and Health. A Type B investigation is appointed and managed at the field level. However, the elements of the investigation and the report format are the same. Accident investigations categorized as either Type A or Type B are conducted according to the standard approach called out in DOE G 225.1, *Implementation Guide for Use with DOE O 225.1, Accident Investigations*.

The determination of whether an occurrence requires a Type A or B investigation is based on the following criteria. This table is a simplification, and actual categorization of the investigation should be made according to the requirements of DOE O 225.1, *Accident Investigations*.

| SAMPLING OF CATEGORIZATION CRITERIA | | |
|---|---|---|
| **Affected Area** | **Type A Criteria** | **Type B Criteria** |
| HUMAN EFFECTS | • Injury or chem/bio hazard exposure resulting (or likely to result) in fatality of employee or member of public<br>• Three persons (DOE, contractor, or public) incur injuries requiring 48 hrs. hospitalization<br>• Rad exposure to: whole body $25R; or eye lens $75R; extremity/skin $250R; or declared pregnant worker $2.5R | • Accident resulting in hospitalization of 5 days for more than 1 person (DOE, contractor, or public)<br>• Accident resulting in 5 or more lost-work day cases<br>• Series of similar accidents resulting in 5 or more lost-work day cases<br>• Rad exposure to: whole body $10R <25R; eye lens $30R <75R; extremity/skin $100R <250R; or declared pregnant worker $1R <2.5R |
| ENVIRONMENTAL EFFECTS | • Hazardous release for DOE facility >5 times reportable quantities that results in serious environmental damage | • Hazardous release for DOE facility$2 <5 times reportable quantities that results in serious environmental damage |
| PROPERTY EFFECTS | • Estimated loss or damage to DOE or other property $$2.5M<br>• Loss, exposure, or theft involving radioactive or hazardous material ... that constitutes a hazard to health and safety or to private property<br>• Unplanned nuclear criticality | • Estimated loss or damage to DOE or other property >$1M but <$2.5M<br>• Operation of nuclear facility beyond authorized limits |
| OTHER EFFECTS | • Any accident so designated by the Secretary or Assistant Secretary for ES&H | • Any accident so designated by the Secretary or Assistant Secretary for ES&H, FM, secretarial officer, or head of field element |

Question: Which type of investigation is required when an injury or chemical or biological exposure to an individual has a high probability of resulting in permanent disability?

Preferred Response: Type A. (Ref: DOE O 225.1 and DOE G 225.1)

d. Explain and apply problem analysis techniques to the identification of potential problems and/or the prevention of problems. Include data gathering techniques and the use of trending/history in your explanation.

Background: From DOE G 225.1, *Implementation Guide for Use with DOE O 225.1, Accident Investigations*, the first step in an accident investigation is to determine the facts or "what happened." Identifying all the relevant facts is critical. The investigation team should review all facts in the totality of the accident's circumstances to ensure that only factual information is considered in determining what actually occurred. Facts should be constantly reviewed for relevance and accuracy, then validated. Not all information can be established as factual with complete certainty; therefore, the team's report should identify areas of uncertainty revealed during the investigation. The investigation team determines facts in a logical manner by:

- Establishing a clear chronological description of the accident (what happened and how)
- Stressing aspects of the accident that may have a bearing on causal considerations
- Establishing accurate, complete, and substantive information that can be used to support the analysis and conclusions of the investigation
- Resolving matters of speculation and disputed facts through analysis, testing, and board discussions

Care must be taken to ensure that relevant facts are not overlooked and are objectively considered during the investigation. Investigators' preconceived notions, press accounts, and other publicized information may bias the investigation. Investigators should examine evidence critically and establish an objective and independent account of the accident. Examples of information to include in the determination of facts are:

- Pertinent background information on the site or facility (e.g., facility description and its mission, location, and history)
- Description of the injury, exposure, property damage, or costs
- Physical evidence, including meteorological conditions at the time of the accident (if relevant)
- Chronology of pertinent events/causal factors
- Physical hazards and safety controls present or absent at the time of the accident
- Technical data on operations or processes impacting the accident
- Related events that are not part of the causal sequence but that provide revealing information about how or why the accident occurred
- Description of organizational, procedural, policy, or safety management processes relating to the accident, such as quality assurance procedures, safety practices, work planning procedures, and hazards analyses

Analyzing facts provides another key element of information for the investigation, that is, "how the accident happened." Analysis focuses on the facts connected to the accident and the conditions leading up to the accident, and also identifies the causal factors that allowed the accident to occur. The investigation team thoroughly documents the methodology it uses to arrive at its understanding of the facts, conditions, and circumstances. Analytical tools can be used to chart events, analyze the relationships of causes to events, assist investigators in reaching conclusions about the causal factors, and help develop judgments of need. Proper investigation and analyses should be performed in a cost-effective manner but not at the expense of rigorous and comprehensive investigation and review of management or other system failures.

To perform a root cause analysis, the following steps are common to most types of root cause analyses:

- Identify the problem. Remember that actuation of a protective system constitutes the occurrence but is not the real problem; the unwanted, unplanned condition or action that resulted in actuation is the problem to be solved. For example, dust in the air actuates a false fire alarm. In this case, the occurrence is the actuation of an engineered safety feature. The smoke detector and alarm functioned as intended; the problem to be solved is the dust in the air, not the false fire alarm. Another example is when an operator follows a defective procedure and causes an occurrence. The real problem is the defective procedure; the operator has not committed an error. However, if the operator had been correctly trained to perform the task and, therefore, could reasonably have been expected to detect the defect in the procedure, then a personnel problem may also exist.

- Determine the significance of the problem. Were the consequences severe? Could they be severe next time? How likely is a recurrence? Is the occurrence symptomatic of poor attitude, a safety culture problem, or other widespread program deficiency? Base the level of effort of subsequent steps of your assessment upon the estimation of the level of significance.

- Identify the causes (conditions or actions) immediately preceding and surrounding the problem (the reason the problem occurred).

- Identify the reasons why the causes in the preceding identification step existed, working your way back to the root cause (the fundamental reason that, if corrected, will prevent recurrence of this and similar occurrences throughout the facility and other facilities under your control). This root cause is the stopping point in the assessment of causal factors. It is the place where, with appropriate corrective action, the problem will be eliminated and will not recur.

<u>Question</u>: While reviewing several minor accident reports, the facility representative notes the following:

- In all cases there is a failure to follow procedures.
- Existing procedures have not been updated to account for current work processes and equipment upgrades.

- There is no control process for updating existing procedures.
- There is no prescribed review cycle for procedures.

Given the above information, what is the most probable root cause?

Preferred Response: Management practices.

Question: An incident involving the improper valving of a safety system has occurred, resulting in the isolation and inoperability of the system and a violation of the facility's operational safety requirements. The contractor has reconfigured the valving to place the system in a safe condition. During the investigation of this incident, the facility representative determines that the same event occurred on the same system (but a different train) three years ago. A corrective action was taken at that time. What should the facility representative do now?

Preferred Response: Review the former event, findings, corrective action, status reports, and follow-up monitoring reports. (Ref: DOE O 210.1, DOE O 225.1, DOE G 225.1, DOE-NE-STD-1004-92, and DOE-STD-7501-95)

2. References

a. DOE-NE-STD-1004-92, *DOE Guideline - Root Cause Analysis Guidance Document*.

b. DOE O 225.1, *Accident Investigations*.

c. DOE G 225.1, *Implementation Guide for Use with DOE O 225.1, Accident Investigations*.

d. DOE O 210.1, *Performance Indicators and Analysis of Operations Information*.

e. DOE-STD-7501-95, *DOE Standard: Development of DOE Lessons Learned Programs*.

Competency 4.2: A Facility Representative shall demonstrate a working knowledge of assessment techniques such as the planning and use of observations, interviews, and document reviews to assess facility performance, report results of assessments, and follow up on actions taken as the result of assessments.

1. Supporting Knowledge and Skills

   a. Describe the Facility Representative's role with respect to performance of oversight of Government-Owned Contractor Operated facilities.

   Background: The Facility Representative is assigned to monitor the performance of facility operations and management. The Facility Representative is a direct safety oversight extension of DOE line management to each respective facility. The authority provided to each Facility Representative is defined by the responsible field element. Facility Representatives have the authority to "stop work" in the facility, except as expressly limited in governing contracts with the operating contractor. This authority covers work performed by the contractor and subcontractors. The field element manager ensures that contractors and subcontractors are aware that facility representatives have this authority. The Facility Representative must "stop work" in the following instances, as a minimum:

   - Conditions exist that pose an imminent danger to the health and safety of workers or the public.
   - Conditions exist, that if allowed to continue, could adversely affect the safe operation of, or could cause serious damage to, the facility.
   - Conditions exist, that if allowed to continue, could result in the release, from the facility to the environment, of radiological or chemical effluents that exceed regulatory limits.

   In this context, imminent danger is defined as any condition or practice such that a hazard exists that could reasonably be expected to cause death or serious physical harm to employees (permanent or prolonged impairment of the body or temporary disablement or requiring hospitalization) unless immediate actions are taken to mitigate the effects of the hazard and/or remove employees from the hazard.

   Question: What is the specific action that a Facility Representative should take if he/she concludes that an imminent danger exists that could reasonably be expected to cause death or serious physical harm?

   Preferred Response: Stop the work.

   Question: Define "imminent danger" in the context of the Facility Representative's stop work authority.

Preferred Response: Any condition or practice such that a hazard exists that could reasonably be expected to cause death or serious physical harm to employees (permanent or prolonged impairment of the body or temporary disablement or requiring hospitalization) unless immediate actions are taken to mitigate the effects of the hazard and/or remove employees from the hazard.
(Ref: DOE-STD-1063-97)

b. Explain the essential elements and processes associated with the following assessment activities, including:
- Exit Interviews
- Closure Process
- Tracking to Closure
- Follow-up
- Corrective Action Implementation

Background: Implementing effective corrective actions for each cause reduces the probability that a problem will recur and improves reliability and safety. The root cause analysis enables the improvement of reliability and safety by selecting and implementing effective corrective actions. To begin, identify the corrective action for each cause, then apply the following criteria to the corrective actions to ensure they are viable. If the corrective actions are not viable, reevaluate the solutions.
1. Will the corrective action prevent recurrence?
2. Is the corrective action feasible?
3. Does the corrective action allow meeting primary objectives or mission?
4. Does the corrective action introduce new risks? Are the assumed risks clearly stated? (The safety of other systems must not be degraded by the proposed corrective action.)
5. Were the immediate actions taken appropriate and effective?

A systems approach, such as Kepner-Tregoe, should be used in determining appropriate corrective actions. It should consider not only the impact they will have on preventing recurrence, but also the potential that the corrective actions may actually degrade some other aspect of nuclear safety. Also, the impact the corrective actions will have on other facilities and their operations should be considered. The proposed corrective actions must be compatible with facility commitments and other obligations. In addition, those affected by or responsible for any part of the corrective actions, including management, should be involved in the process. Proposed corrective actions should be reviewed to ensure the above criteria have been met, and should be prioritized based on importance, scheduled (a change in priority or schedule should be approved by management), entered into a commitment tracking system, and implemented in a timely manner. A complete corrective action program should be based not only on specific causes of occurrences, but also on items such as lessons learned from other facilities, appraisals, and employee suggestions. A successful corrective action program requires management that is involved at the appropriate level and is willing to take responsibility and allocate adequate resources for corrective actions.

Question: What questions are asked to determine if a proposed corrective action is viable?

Preferred Response:

1. Will the corrective action prevent recurrence?
2. Is the corrective action feasible?
3. Does the corrective action allow meeting primary objectives or mission?
4. Does the corrective action introduce new risks? Are the assumed risks clearly stated? (The safety of other systems must not be degraded by the proposed corrective action.)
5. Were the immediate actions taken appropriate and effective? (Ref: DOE-NE-STD-1004-92)

2. References

a. DOE-STD-1063-97, *Establishing and Maintaining a Facility Representative Program at DOE Facilities.*

b. DOE-NE-STD-1004-92, *DOE Guideline - Root Cause Analysis Guidance Document*.

Competency 4.3: A Facility Representative shall demonstrate a working level knowledge of the Department of Energy emergency management system and response practices.

1. Supporting Knowledge and Skills

   a. Describe the key elements of emergency preparedness, including planning, operations, principles, and methods.

      Background: DOE Order 151.1, *Comprehensive Emergency Management System*, establishes policy; assigns roles and responsibilities; and provides the framework for the development, coordination, control, and direction of the Department of Energy (DOE) Emergency Management System (EMS). The Order establishes requirements for emergency planning, preparedness, response, recovery, and readiness assurance activities and describes the approach for effectively integrating these activities under a comprehensive, all-emergency concept. DOE facilities/sites or activities, Operations/Field Offices, and DOE Headquarters offices are required to develop emergency management programs as elements of an integrated and comprehensive EMS. Together, these elements ensure that the DOE EMS is prepared to respond promptly, efficiently, and effectively to any emergency involving DOE facilities/sites, activities, or operations to protect workers, the public, the environment, and national security.

      The DOE comprehensive EMS is based on a three-tiered management structure consisting of DOE facilities/sites, Operations/Field Offices, and Headquarters, with each tier having specific roles and responsibilities during an emergency. Each organizational tier provides management, direction, and support of emergency response activities. The facility/site manages the tactical response to the emergency by directing the mitigative actions necessary to resolve the problem, protect the workers, the public, and the environment, and return the facility to a safe condition. The DOE Operations/Field Office oversees the facility response and provides assistance and guidance to the facility management. DOE Headquarters provides strategic direction to the response, provides assistance and guidance to the Operations/Field Office, and evaluates the broad impacts of the emergency on the DOE complex. Headquarters also coordinates with other Federal agencies on a national level, provides information to representatives of the executive and legislative branches of the Federal government, and responds to inquiries from the national media.

      Question: DOE's primary organizational approach to responding to operational emergencies involves which organizations?

      Preferred Response: Headquarters, contractor management, and Operations/Field Office.
      (Ref: DOE O 151.1 and DOE G 151.1)

      Background: Operational Emergencies are unplanned, significant events or conditions that require time-urgent response from outside the immediate affected site or facility. Operational Emergencies may involve degradation of personnel health and safety, the environment, security and safeguards, or the release or loss of control of hazardous materials. An Operational Emergency is categorized

according to the following types: Health and Safety Operational Emergency, Environmental Operational Emergency, Security and Safeguards Operational Emergency, Off-site DOE Transportation Operational Emergency, and Hazardous Materials Operational Emergency. If the emergency is a Hazardous Materials Operational Emergency, it is then classified according to the following options: Alert, Site Area Emergency, and General Emergency.

The process of categorizing events as Operational Emergencies and of classifying hazardous material events was created to ensure rapid recognition of emergency conditions and timely response. The emergency categorization/classification system represents a set of pre-approved decisions, agreed to by senior management and state and local officials, that allows on-site supervisory personnel to make rapid decisions affecting personnel, facilities, and resources in response to an emergency.

Emergency Action Levels (EALs) are criteria used to classify such hazardous material emergencies. EALs are developed from the facility's Hazards Assessment, which also constitutes the technical basis for that facility's hazardous material emergency management system. The Hazards Assessment identifies and characterizes the hazards associated with a facility, determines the events and conditions that could lead to releases, and quantifies the potential on-site and off-site consequences of each postulated accident or emergency event/condition.

The definitions of the classifications of hazardous material operational emergencies are:

*Alert* - Substantial actual or potential degradation of level of safety. Hazardous material releases not expected to exceed Protective Action Criteria (PAC) levels at facility boundary. Substantial actual or potential degradation of level of safety. No immediate threat to workers or general public.

*Site Area Emergency* - Actual or potential major failures of functions needed for protection of workers and public. Hazardous material releases expected to exceed PAC levels beyond facility boundary, but not off-site. Actual or potential system failures that threaten the integrity of the device. May adversely impact health and safety of workers in immediate vicinity, but not the general public.

*General Emergency* - Actual or imminent catastrophic reduction of safety systems with potential or actual loss of hazardous material. Hazardous material releases expected to exceed PAC levels off-site. Actual or likely catastrophic failures of safety or secondary systems threatening the integrity of the device. May adversely impact health and safety of both workers and public.

Question: What is the relationship between the terms "emergency classification" and "emergency action levels"?

Preferred Response: Emergency action levels are used as triggers in classifying emergencies into emergency classification levels.

Question: What is the classification of an event involving actual or likely failure of facility functions needed to protect on-site personnel, public health and safety, and the environment?

Preferred Response: A Site Area Emergency. (Ref: DOE O 151.1 and DOE G 151.1)

Background: There are four basic emergency response functions that should always be performed, independent of the emergency conditions, category, and class.

*Emergency Management* - actions taken to provide, maintain, control, and coordinate responding resources.

*Facility Operations* - actions taken or directed by on-shift personnel to prevent escalation of the event and stabilization and restoration of the facility to safe shutdown or continued operation as appropriate.

*Emergency Assessment* - assessment by knowledgeable personnel of past, present, and future physical and external conditions of the facility.

*Protective Action Formulation* - actions and recommendations formulated and implemented to protect the health and safety of the workers and the public.

At the onset of an emergency, all these functions may be the responsibility of one individual, such as a building manager or on-shift supervisor. As required members of an Emergency Response Organization (ERO) respond, the responsibility for the function may shift to other individuals because the magnitude of responsibility becomes too great. In general, the ERO component formed to manage response actions during emergencies involving DOE facilities or requiring DOE assistance is the Emergency Management Team (EMT).

At each response tier (Facility, Field, and HQ), the EMT provides for overall management, direction, and control of the emergency response and normally operates from a command center or Emergency Operations Center (EOC). The terms “emergency response organization” and “emergency management team” are not synonymous. All personnel who may be needed to perform duties, beyond those specified by 29 CFR 1910.120 for the first responder awareness level, during a response to any of the broad range of emergencies defined in the Hazards Survey or Hazards Assessment are members of the ERO. The management cadre of the ERO directly responsible for basic functions is the EMT. Analysis of potential facility events mentioned above (the emergency scenarios) should lead planners to determine how many, and of what qualifications, the augmenting ERO staff should be. Although the functional response needs and the results of the Hazards Survey and Hazards Assessment should be the predominant factors affecting the ERO structure, the availability and location of existing emergency response facilities may affect the allocation of ERO personnel. The emergency plan should address the scope and responsibility of the support functions and the equipment and facilities required for performance of the function. Implementing procedures should assign personnel to the function and provide checklists and directives on performance of those duties.

Question: What should personnel at the scene of a nuclear incident do when responding to a nuclear criticality monitor alarm?

Preferred Response: Evacuate the area and report directly to a designated area.
(Ref: DOE O 151.1, DOE G 151.1, and ORO Site-Specific Emergency Response Procedures)

b. Explain the Facility Representative's role and responsibilities associated with emergency management and response to unplanned events.

Background: The incident commander is the individual who, at any one time, is responsible for and in control of the response effort. This individual is the person responsible for the direction and coordination of the response effort. An incident commander's position should be occupied by the most senior, appropriately trained individual present at the response site. Yet, as necessary and appropriate by the level of response provided, the position may be occupied by many individuals during a particular response as the need for greater authority, responsibility, or training increases. It is possible for the first responder at the awareness level to assume the duties of incident commander until a more senior and appropriately trained individual arrives at the response site. Therefore, any emergency responder expected to perform as an incident commander should be trained to fulfill the obligations of the position at the level of response they will be providing, including the following:

1. Ability to analyze a hazardous substance incident to determine the magnitude of the response problem.
2. Ability to plan and implement an appropriate response plan within the capabilities of available personnel and equipment.
3. Ability to implement a response to favorably change the outcome of the incident in a manner consistent with the local emergency response plan and the organization's standard operating procedures.
4. Ability to evaluate the progress of the emergency response to ensure that the response objectives are being met safely, effectively, and efficiently.
5. Ability to adjust the response plan to the conditions of the response and to notify higher levels of response when required by the changes to the response plan.

From the *DOE Radiological Control Manual* (Article 346), the following are the general responses to abnormal situations:

1. Response to a Continuous Air Monitor alarm should include the following actions:
   a. Stop work activities
   b. Immediately exit the area
   c. Notify Radiological Control personnel

2. Response to increasing or unanticipated radiation levels, as identified by a supplemental dosimeter or Area Radiation Monitor Alarm, should include the following actions:
   a. Stop work activities
   b. Alert others
   c. Affected personnel immediately exit the area
   d. Notify Radiological Control personnel

3. Response to a criticality alarm should include the following actions:
   a. Immediately evacuate the area, without stopping to remove protective clothing or perform exit monitoring
   b. Report to designated assembly area

4. Response to a personnel contamination monitor alarm should include the following actions:
   a. Remain in the immediate area
   b. Notify Radiological Control personnel
   c. Take actions that may be available to minimize cross-contamination, such as putting a glove on a contaminated hand
   d. Take follow-up actions in accordance with Article 541

5. Response to a spill of radioactive material should include the following actions:
   a. Stop or secure the operation causing the spill
   b. Warn others in the area
   c. Isolate the spill area, if possible
   d. Minimize individual exposure and contamination
   e. Secure unfiltered ventilation
   f. Notify Radiological Control personnel

6. For spills involving highly toxic chemicals:
   a. Immediately exit the area without attempting to stop or secure the spill
   b. Promptly notify the Industrial Hygiene or Hazardous Material team and Radiological Control personnel

On-site notification messages to facility personnel should support activation of the facility ERO at a level appropriate to the event classification. Further, the notification messages should contain sufficient information to initiate immediate and appropriate protective response for personnel in the facility. Prearranged, standardized scripts for public address announcements to be made for various emergency scenarios and classifications should be used. Public address or alarm systems in high noise areas should also be considered. Pagers, where used, should provide for positive feedback through call-in or other methods to confirm that notification was successful and recall of personnel will be achieved. Other site or facility-specific procedures may be necessary depending on whether sites have collocated facilities, Operations/Field offices that are not located on-site, or other non-standard arrangements.

Question: What is the primary responsibility of the on-scene incident commander in containing a hazardous material spill?

Preferred Response: Implement the emergency response plan.

Question: What is the immediate response to a continuous air monitor alarm?

Preferred Response: Stop work activities, immediately exit the area, and notify Radiological Control personnel.

Question: What is the immediate response to increasing or unanticipated radiation levels sensed by dosimeters or area radiation monitors?

Preferred Response: Stop work activities, alert other personnel, have affected personnel exit the area, and notify Radiological Control personnel.

Question: What is the immediate response to a criticality alarm?

Preferred Response: Evacuate the area and report to the designated assembly area.

Question: What is the immediate response to an alarming personnel contamination monitor?

Preferred Response: Remain in the immediate area, notify Radiological Control personnel, take actions to minimize cross-contamination, and take follow-up actions.

Question: Which type of communication system should normally be used to make emergency announcements?

Preferred Response: Public address. (Ref: 10 CFR 835, 29 CFR 1910.120, DOE O 151.1, DOE G 151.1, DOE RadCon Manual, and ORO Site-Specific Emergency Response Procedures)

2. References

   a. DOE O 151.1, *Comprehensive Emergency Management System*.

   b. DOE G 151.1, *Emergency Management Guide*.

   c. ORO Site-specific Emergency Response Procedures.

   d. 10 CFR 835, "Occupational Radiation Protection."

   e. 29 CFR 1910.120, "Occupational Safety and Health Standards, Subpart H--Hazardous Materials, Hazardous Waste Operations and Emergency Response."

   f. DOE/EH-256T, *DOE Radiological Control Manual*.

Competency 4.4: A Facility Representative shall demonstrate a familiarity level knowledge of applicable DOE Orders sufficient to conduct independent assessment of contractor and/or Federal employee work activities.

1. Supporting Knowledge and Skills

   a. Conduct a minimum of three assessments of contractor or Federal employee (as appropriate) work performance related to the applicable DOE Orders.

      Background: Conducting observations in each significant area of facility operations is key to maintaining operational awareness and to performing routine or special facility assessment. Some activities that can be observed include:
      - Management control, communication, and command
      - Personnel using procedures
      - Personnel following rules, obeying signs, using safety equipment
      - Operators performing inspection tours
      - Control area activities including response to indications, access control, monitoring of control panels, control of routine operations and special activities
      - Testing of emergency communication systems and the use of communications equipment such as radios
      - On-shift training during routine operations, special activities, and drills
      - Authorization, placement, verification, and removal of lockouts and tagouts during maintenance operations
      - Independent verification of component and system alignment before start up or testing activities
      - Shift turnover between operators, maintenance personnel, shift supervisors or foremen, and personnel in the control area
      - The recording of data in logbooks or on round sheets by operators, maintenance personnel, control area operators, and shift supervisors or foremen
      - Process water sampling and analysis
      - The control and use of activity procedures during routine operations, activities, emergency situations, and drills
      - Placement, control, and removal of jumpers and temporary equipment in use at the activity;
      - Activity drills and exercises conducted during the assessment
      - Operator aids posted throughout the activity
      - Number and reason alarms actuated
      - The labeling of equipment and systems in the activity

      In preparing for and performing observations, there are several things to keep in mind:
      - Be familiar with the operations
      - Be familiar with the guidelines and use them as an expectation baseline
      - Pay close attention to ensure every detail of the observation is taken in and recorded
      - Follow your intuition. If something does not look or seem right, check further. Assume your intuition is correct until your research proves otherwise

- Take copious notes. This will make it easier to follow up on your observations.
- Data gathered from observations should be verified and cross-checked by the following methods: observe the same operation being performed by different personnel, observe different operations on the same shift, or observe different shifts performing similar operations

In general, the observer should be familiar with and abide by the Operations Office's policy concerning stop work authority. While observing an operation, if an unsafe situation arises in which operators fail to recognize a potential safety concern, the assessor has a responsibility to point this out to the operators. Having the safety concern pointed out, the operators should correct the problem. If they do not, the next step might be to contact the work supervisor so that he or she can put a stop to the unsafe work. If the situation requires immediate action to prevent personal injury, the assessor must be the authority in stopping the unsafe work. An observer who stops unsafe work should notify his or her supervisor and the facility manager immediately.

According to DOE O 425.1, *Startup and Restart of Nuclear Facilities*, DOE line management shall determine (and ensure that contractor management determines) if Operational Readiness Reviews are required for startup of new nuclear facilities or restart of a nuclear facility using the following requirements. DOE shall conduct (and ensure that contractors conduct) an Operational Readiness Review in accordance with this Order when any of the following conditions occur:

1. Initial startups of new hazard categories 1, 2, and 3 nuclear facilities.
2. Restart after a nuclear facility unplanned shutdown directed by a DOE management official for safety or other appropriate reasons.
3. Restart after an extended shutdown for hazard categories 1 and 2 nuclear facilities. Extended shutdown for a hazard category 1 nuclear facility is 6 months. Extended shutdown for a hazard category 2 nuclear facility is 2 months.
4. Restart of hazard categories 1 and 2 nuclear facilities after substantial process, system, or facility modifications that require changes in the safety basis previously approved by DOE.
5. Restart after a nuclear facility shutdown because of operations outside the safety basis.

For restarts of nuclear facilities not requiring an Operational Readiness Review, as defined in DOE O 425.1, DOE line management shall evaluate (and ensure that contractor management evaluates) the need for performing a Readiness Assessment prior to restart. This includes the startup or restart of program work within operating facilities when the new or restarted program work does not require DOE approval of changes to facility limits or requirements as stated in Operational Safety Requirements/Technical Safety Requirements (OSRs/TSRs), Basis for Interim Operations/Safety Analysis Reports (BIO/SARs), or other equivalent authorization basis documents. When a Readiness Assessment is required, Operations Offices shall develop procedures and ensure that the contractors use these procedures to gain Operations Office approval of the startup or restart of nuclear facilities. If a Readiness Assessment is not to be performed, the contractor's standard procedures for startup or restart will be used.

Question: Given that as a system was being filled and pressurized following maintenance, the storage tank overflow monitor alarmed. Before the operators could respond to this alarm, contaminated wastewater spilled onto the building floor and into the floor drain. What is one specific problem you should investigate?

Preferred Response: Whether the operators determined the constitution of the contaminated liquid.

Question: What is the purpose of periodic inspections of a lockout/tagout program?

Preferred Response: Determine program compliance and correct any inadequacies.

Question: During a surveillance, the Facility Representative notes an in-process deficiency. What immediate action should the Facility Representative take?

Preferred Response: Point out the deficiency to the person in charge of the activity.

Question: You observe workers rigging piping from a flatbed truck to a storage area at your facility. You note that the slings being used to lift the piping are actually nylon straps with ratchet "buckles" previously used to secure the piping to the flatbed truck. What should be your immediate action?

Preferred Response: Notify the workers of imminent danger.

Question: As a tank was being filled and pressurized, the contaminated wastewater spilled into the building floor and into the floor drain. If you observed the spill occurring, what immediate action would you take?

Preferred Response: Leave the area and notify the area supervisor.

Question: You observe an electrician preparing to open an energized control panel, and you notify the electrician's supervisor that the action appears to be unsafe. The supervisor argues that the panel is rated at less than 600 volts AC and is NOT covered by Occupational Safety and Health Administration safety rules. You do not know exactly what he is talking about and are unsure of the electrical voltage rating issue, but nevertheless feel that the work is unsafe. Do you have the authority to press the issue in this case, even to the point of issuing a verbal stop work order?

Preferred Response: Yes, you can issue a verbal stop work order even if an activity only appears to be unsafe.

Question: Under DOE O 425.1, who is responsible for identifying, via startup notification reports, when startups or restarts require operational readiness reviews or readiness assessments?

Preferred Response: The cognizant contractor management. (Ref: 29 CFR 1910.120, DOE Order 5480.19, DOE O 225.1, DOE O 232.1A, DOE O 425.1, DOE-STD-1063-97, and

DOE-EM-STD-5505-96)

2. References

   a. 29 CFR 1910.120, "Occupational Safety and Health Standards, Subpart H--Hazardous Materials, Hazardous Waste Operations and Emergency Response."

   b. DOE Order 5480.19, *Conduct of Operations Requirements for DOE Facilities*.

   c. DOE O 225.1, *Accident Investigations*.

   d. DOE O 232.1, *Occurrence Reporting and Processing of Operations Information*.

   e. DOE O 425.1, *Startup and Restart of Nuclear Facilities*.

   f. DOE-STD-1063-97, *Establishing and Maintaining a Facility Representative Program at DOE Facilities*.

   g. DOE-EM-STD-5505-96, *DOE Limited Standard - Operations Assessments*.

Competency 4.5: A Facility Representative shall demonstrate a working level knowledge of Conduct of Maintenance principles and Department of Energy requirements to ensure maintenance is performed in a safe and efficient manner.

1. Supporting Knowledge and Skills

   a. Define each of the following maintenance-related terms and explain their relationship to each other:
      - Corrective Maintenance
      - Preventative Maintenance (PM)
      - Periodic Preventive Maintenance
      - Planned Preventive Maintenance
      - Predictive Maintenance

      Background: Corrective Maintenance is the repair of failed or malfunctioning equipment, systems, or facilities to restore the intended function or design condition. This maintenance does not result in a significant extension of the expected useful life.

      Preventive Maintenance, defined as including periodic and planned maintenance, is utilized to maintain a piece of equipment within design operating conditions and to realize its maximum reasonable useful life.

      Periodic Preventive Maintenance activities are accomplished on a routine basis (typically based on operating hours or calendar time) and may include any combination of external inspections, alignments or calibrations, internal inspections, overhauls, and component or equipment replacements.

      Planned Preventive Maintenance activities are performed prior to equipment failure and can be initiated by predictive or periodic maintenance results, by vendor recommendation, or by experience. These include items such as scheduled valve repacking, replacement of bearings as indicated from vibration analysis, major or minor overhauls based on experience factors or vendor recommendations, and replacement of known life-span components.

      A Predictive Maintenance program is established and utilized to monitor performance, determine trends, analyze parameters, properties, and performance characteristics or signatures of equipment in order to forecast equipment degradation so that “as-needed” planned maintenance can be performed prior to equipment failure. Predictive maintenance techniques, such as Reliability-Centered Maintenance (RCM) programs, are used to identify the need for PM prior to equipment failure so that the predictive maintenance program is effective in reducing the failure of structures, systems, and components. Predictive maintenance activities involve continuous or periodic monitoring and diagnosis in order to forecast component degradation so that “as-needed” planned maintenance can be performed prior to equipment failure. Not all equipment conditions and failure modes can be monitored; therefore, predictive maintenance must be selectively applied. Reliable predictive maintenance is normally preferable to periodic internal inspection or equipment overhauls.

RCM is a maintenance system that determines the most effective maintenance activity, based on an analysis of an item's failure modes, failure rates, and the importance of the item to the safe operation of the facility.

Question: How can a contractor's predictive maintenance program identify a potential wall failure in a wastewater system check valve?

Preferred Response: Performance monitoring.

Question: Systematically planned and scheduled actions performed to avert potential equipment failure constitute what type of maintenance?

Preferred Response: Preventive.

Question: What is the maintenance system that determines the most effective maintenance activity based on an analysis of an item's failure modes, failure rates, and the importance of the item to the safe operation of the facility?

Preferred Response: Reliability-centered.

Question: What is the primary factor that should be considered in establishing a preventive maintenance program?

Preferred Response: Plant (or facility) experience. (Ref: DOE O 430.1 and DOE Order 4330.4B)

b. Explain the purpose and content of a Master Equipment List.

Background: The Master Equipment List is a detailed master list of both safety-related and nonsafety-related equipment, components, and structures to be included in the maintenance program. Special tools and equipment should be included in this master list. This list can also be used effectively in establishing the maintenance history program.

The maintenance history program should clearly define the systems and equipment that require documentation and retention of historical data. Systems and components that affect safe and reliable facility operation are obvious candidates for the program. In addition, equipment requiring repetitive maintenance should be considered for inclusion in this program. This compilation of system and equipment should provide an engineering database or allow easy cross-reference to such information as the equipment unique identification number and name; system, manufacturer, model, serial number, and other appropriate name plate data; lubrication data; applicable vendor manuals and drawings; spare parts reference numbers; and common equipment cross-references. The Master Equipment List could be effectively used to establish this compilation.

Question: When developing a Maintenance Program, what is the purpose of the Master Equipment

List?

Preferred Response: Identify equipment, components, and structures to be included in the maintenance program. (Ref: DOE O 430.1 and DOE Order 4330.4B)

c. Observe Post-Maintenance Testing and discuss the activity, including several examples of maintenance activities to which Post-Maintenance Testing would be applied.

Background: Post-Maintenance Testing is used to verify that the maintenance was performed correctly and that the equipment operates correctly and performs its desired function. A Post-Maintenance Test should be performed after corrective maintenance and after some preventive maintenance activities. The tests performed should be commensurate with the maintenance work performed and the importance of the equipment to station safety and reliability. In some cases, this may include testing of additional equipment to verify system performance.

Question: When should Post-Maintenance Testing be performed?

Preferred Response: After all Corrective Maintenance activities.

Question: What is the purpose of Post-Maintenance Testing?

Preferred Response: Verify that components will fulfill their design function after maintenance. (Ref: DOE O 430.1 and DOE Order 4330.4B)

d. Describe the principles of instrument calibration to ensure safe and efficient operation.

Background: Measuring and test equipment (M&TE) includes all tools, gauges, instruments, devices, or systems used to inspect, test, calibrate, measure, or troubleshoot in order to control or acquire data for verifying the conformance of an instrument or piece of equipment to specified requirements. M&TE does not include permanently installed facility process or control instrumentation, nor does it include test equipment used for preliminary checks where data obtained will not be used to determine acceptability or verify conformance to established criteria.

The M&TE selected for use should have the precision necessary to ensure that facility instrumentation and equipment will operate within design accuracy requirements and be durable enough for their intended application. Control and calibration requirements for M&TE apply to both on-site and off-site calibration facilities and non-nuclear facility contractor or subcontractor groups that are engaged in maintenance activities.

New M&TE devices should be calibrated prior to use to verify that they meet acceptance criteria, are functional, and are safe to use.

Uncalibrated test equipment used only for troubleshooting should be clearly marked so that it is not

used as M&TE for taking data. Test equipment that is used only for troubleshooting does not need to be fully calibrated, but it should be periodically checked for operability and safety. For example, a volt-ohm meter might be checked for operability every six months.

Question: When is the only time uncontrolled/non-calibrated measuring and test equipment may be utilized in performing maintenance activities in a nuclear facility?

Preferred Response: When the data obtained will not be used to determine acceptability.

Question: How often should measuring and test equipment be functionally checked?

Preferred Response: Before every use. (Ref: DOE O 430.1 and DOE Order 4330.4B)

e. Conduct an assessment of maintenance activities.

Background: Management involvement in control of maintenance activities should ensure that maintenance practices are effective in maintaining safe and reliable facility operation. A work control program is an administrative method by which maintenance activities are identified, initiated, planned, approved, scheduled, coordinated, performed, and reviewed for adequacy and completeness. The program should address the following areas:

1. Administrative procedures should describe the control of work from identification and planning through completion, review, and storage of history data. Personnel (including key non-facility contractor and subcontract personnel) involved in the conduct and support of maintenance should be trained in the use of these procedures.
2. The responsibility for various types of work (such as packing adjustments, equipment lubrication, and maintenance on health physics portable instrumentation) should be identified.
3. A work request form (and/or work package) should be prepared and used to direct and document maintenance activities. This form should provide for documented review at the appropriate level. The work request should be used to control maintenance activities by ensuring correct equipment isolation, personnel safety, and the proper conduct of maintenance and post-maintenance tests.
4. Troubleshooting should be controlled to prevent unplanned repairs and unauthorized modifications.
5. The requested work should be reviewed to ensure unauthorized modifications are not accomplished by the maintenance request.
6. Goals for high-quality workmanship, safe work practices, and improving radiological protection should be emphasized to maintenance personnel. A key factor in achieving these goals is worksite guidance and overview provided by maintenance supervisors. Monitoring to identify rework (maintenance that has to be repeated) can be effectively used to identify programmatic or qualification deficiencies.
7. Work accomplished and the results of post-maintenance tests, including satisfactory return to service of the equipment or system, should be documented.
8. Work requests should be reviewed following the completion of maintenance to verify that the activity was satisfactorily completed in accordance with facility procedures and standards and to

capture maintenance history data.

9. Temporary repairs should be performed under the facility's temporary modification program to provide engineering review of the adequacy of the temporary repair and a means for identifying required permanent repairs.

10. Non-facility contractor personnel and subcontractors conducting maintenance should be controlled and held accountable to the same policies and procedures as facility personnel. The work control system should provide the data necessary to properly plan and schedule maintenance activities.

The work control system also provides a means of collecting facility maintenance data to be used for failure analysis and maintenance history. The system used should be comprehensive enough to fulfill these functions, yet simple enough to function efficiently.

Question: During the overhaul of a contaminated wastewater system check valve, a mechanic used an unauthorized means to remove a frozen bolt. Later, during system pressurization, the check valve flange cracked, resulting in the check valve being bound in the open position. Which maintenance program control could have prevented this failure?

Preferred Response: Monitoring performance.

Question: You are reviewing a maintenance activity in your facility. The only document that the craftsman has in his possession is a Maintenance Work Order. In terms of maintenance control, what is your assessment of this situation?

Preferred Response: Control of the activity is adequate if the Maintenance Work Order is sufficiently detailed. (Ref: DOE O 430.1, DOE Order 4330.4B, DOE Order 5480.19, and DOE-EM-STD-5505-96)

2. References

a. DOE O 430.1, *Life Cycle Asset Management*.

b. DOE Order 4330.4B, *Maintenance Management Program*.

c. DOE Order 5480.19, *Conduct of Operations Requirements for DOE Facilities*.

d. DOE-EM-STD-5505-96, *DOE Limited Standard - Operations Assessments*.

Competency 4.6: A Facility Representative shall demonstrate a working level knowledge of the Occurrence Reporting and Processing System necessary to ensure that occurrences are properly reported and processed in accordance with DOE Order 5000.3B, *Occurrence Reporting and Processing of Operations Information*.

1. Supporting Knowledge and Skills

   a. Describe the intent and contents of DOE Order O 232.1 requirements for Notification Reports including the following:
      - Reporting Philosophy
      - Identification
      - Categorization
      - Notification Process
      - Reporting Requirements
      - Analysis

      Background: For facilities under their cognizance, Facility Representatives monitor day-to-day operations and performance to ensure that facility personnel implement a program compatible with this Order and that lessons learned and generic or programmatic implications are identified and elevated to the Head of the Field Element for appropriate action. The Facility Representative is the primary point of contact for the contractor to notify DOE of reportable occurrences as prescribed in DOE Order O 232.1, *Occurrence Reporting and Processing of Operations Information*. For the Secretarial Officers and Field Organizations to realize the maximum benefit from the Facility Representative program, carefully considered reporting requirements should be established for each Facility Representative position. Guidance should be provided on the content of periodic or special reports. Care should be taken to ensure that reporting does not become an onerous task that unduly limits the management activities of the Facility Representative. In order to facilitate a direct communications link with senior contractor management, the Facility Representative and DOE management should meet with senior contractor management on a periodic basis to report the results of Facility Representative assessments. The purpose of the meeting should be to discuss trends and systemic issues. One of a Facility Representative's responsibilities is to receive verbal occurrence notifications and to review Occurrence Reports. An Occurrence Report is a documented evaluation of an event or condition that is prepared in sufficient detail to enable the reader to assess its significance, consequences, or implications and to evaluate the actions being proposed or employed to correct the condition or to avoid recurrence.

      The purpose of DOE Order O 232.1, *Occurrence Reporting and Processing of Operations Information* is:
      - To establish and maintain a system for reporting operations information related to DOE-owned and -leased facilities and processing that information to identify the root causes of Unusual, Off-Normal, and Emergency Occurrences and provide for appropriate corrective action.

- To perform the following:
  1. Timely identification, categorization, notification, and reporting to DOE management of reportable occurrences at DOE-owned and -leased facilities.
  2. Review of reportable occurrences to assess the significance, root causes, generic implications, and the need for corrective actions.
  3. Timely evaluation and implementation of appropriate corrective actions.
  4. Dissemination of Occurrence Reports to DOE operations and facilities to prevent similar occurrences and facilitate analyses.
  5. Maintenance of a central DOE system for reporting, processing, retrieving and analyzing unclassified, nonsensitive Occurrence Reports.

Question: What is an Occurrence Report?

Preferred Response: It is a documented evaluation of an event, an assessment of the consequences, and an evaluation of management's involvement.

Question: Significant internal or external threats to safety, the environment, health, protection, or the ability of a facility to operate are categorized as what type of occurrence?

Preferred Response: Unusual.

Question: Name three categories of occurrences reportable to DOE.

Preferred Response: Emergency, Unusual, and Off-Normal.

Question: Within how many hours of discovery must an occurrence categorization be completed?

Preferred Response: 2.

Question: As identified in DOE O 232.1A, within how many days must a final occurrence report with all details, corrective actions, and lessons learned be submitted to DOE?

Preferred Response: 45.

Question: The National Pollutant Discharge Elimination System monitoring equipment installed at the end of the effluent removal and purification system failed without alarm indications. The failure was identified during routine operator rounds. Where can the criteria be found that the facility should use to determine whether the equipment failure constitutes a reportable occurrence?

Preferred Response: DOE O 232.1A.

Question: The Area Z management determined that faulty information contained in several operator on-the-job training and qualification guides constituted a reportable occurrence. It was later determined that this incident does NOT meet the definition of an occurrence. What downgrade actions should the contractor's facility management take?

Preferred Response: Submit changes in a ten-day occurrence report. (Ref: DOE O 232.1, DOE M 232.1-1A, and DOE-STD-1063-97)

b. Explain the Facility Representative's responsibilities associated with DOE Order 5480.29, *Employee Concerns*, with respect to the identification, reporting, reviewing, and documentation of employee concerns.

Background: The Employee Concerns Management System was established to provide an anonymous, formal, and measurable tracking system of employee concern status. The purpose of the Employee Concerns Management System as described in DOE Order 5480.29 is to create the framework for promptly identifying, reporting, and resolving employee concerns regarding DOE facilities or operations. These concerns originate from DOE employees or DOE contractor or subcontractor employees having beliefs or technical knowledge related to an impropriety or inadequacy associated with the environment, safety, or health (ES&H) conditions of DOE and contractor-managed nuclear and nonnuclear activities. An employee concern is defined as a declaration, statement, or assertion of impropriety or inadequacy associated with the ES&H aspects of DOE- managed and contractor-managed activities, the validity of which has not been established. This framework complements existing employee reporting procedures in order to allow an independent avenue for anonymous and confidential reporting and evaluation of employee ES&H concerns without supplanting existing requirements in DOE orders, rules, and regulations for employee reporting. A concern, once assigned to a reviewer, is required to be evaluated within 30 days. If a contractor whistle-blower complains of reprisal, the DOE Field or Operations Office should refer the complaint to the Office of DOE Contractor Employee Protection.

Question: Why was the Employee Concerns Management System established?

Preferred Response: Provide an anonymous, formal, and measurable tracking system of employee concern status.

Question: What must be preserved during the processing of employee concerns?

Preferred Response: Employee anonymity and confidentiality.

Question: With reference to DOE Order 5480.29, what is the definition of an employee concern?

Preferred Response: An employee concern is defined as a declaration, statement, or assertion of impropriety or inadequacy associated with the ES&H aspects of DOE-managed and contractor-managed activities, the validity of which has not been established.

Question: If a contractor whistle-blower complains of reprisal, to whom does the DOE Field or Operations Office refer the complaint?

Preferred Response: Office of DOE Contractor Employee Protection.

Question: In general, from the point of the concern being assigned to a reviewer, what is the time limit for evaluating the employee concern?

Preferred Response: 30 days.

Question: What action should the employee take if he or she is dissatisfied with the effectiveness of existing employee concerns programs?

Preferred Response: Submit the concern through the DOE Employee Concerns Management System. (Ref: DOE O 232.1, DOE M 232.1-1A, and DOE-STD-1063-97)

2. References

   a. DOE O 232.1, *Occurrence Reporting and Processing of Operations Information*.

   b. DOE M 232.1-1A, *Occurrence Reporting and Processing of Operations Information*.

   c. DOE-STD-1063-97, *Establishing and Maintaining a Facility Representative Program at DOE Facilities.*