2.3 Bus Idle-Reduction Technologies

Although many localities have passed ordinances restricting bus idling, enforcement is uneven, and few suggest alternatives to keep the passengers comfortable in extreme weather. (In moderate weather, the bus can simply be turned off.) Tour bus drivers at Washington, D.C., tourist sites do turn off their buses to avoid the $800 fine. Since their engines have pre-heaters, they can keep their buses warm in cold weather by idling the bus for the legally permitted three minutes at a time[1]. Other locales require the buses to park at more remote locations, but may permit them to idle there, simply making the problem less visible.

Alternative fuels are being demonstrated to reduce emissions while the engines are running. These do not reduce energy use, but do decrease petroleum consumption. Simple remedies like altering the parking patterns to move exhaust away from children waiting to board school buses are also possible.

Any of the units described above for trucks could be used on buses with little modification. Small direct-fired diesel heaters, similar to those available for trucks, can be used to keep the engine warm, as can electrical resistance heaters or immersion heaters for the coolant. These can be run off the bus's batteries or from a plug-in system at the depot.

A novel system for heating buses at an outdoor depot or an unheated garage has been developed and installed at several locations in Canada (see schematic in Figure 2.18). A mixture of water and glycol (antifreeze) is warmed in a central location, by any type of boiler, and the fluid circulated either underground or overhead to the bus fleet. Each bus is equipped with a heat exchanger to transfer the heat to its coolant system. Electricity and compressed air may also be supplied, and timers are available. Energy consumption data are not yet available, but considerable savings are expected compared to idling of the buses.

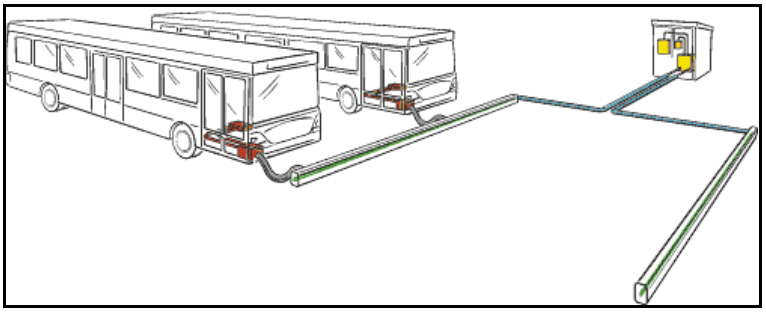

Figure 2.18 Bus preheating system schematic (UWE)

[1]Personal communication with drivers in front of American Museum of Natural History, April 15, 2004

2.4 Off-Road Vehicles

Although heaters are available for this market, vendors of auxiliary power units have not actively pursued sales of such devices to contractors or construction equipment fleet leasers, possibly because of the relatively short cab occupancy times discussed above. It may be feasible to apply APU technology to provide cab comfort and amenities in large agricultural equipment, such as combine harvesters, in order to restrict the prime mover's fuel consumption to crop operations only. However, cab service represents a relatively small percentage of unit fuel consumption. Other efficiency improvements from the MorElectric Initiative may also be applicable to this sector.

Fuel consumption rates per unit operating time vary greatly among off-road equipment types, even those with similar engine displacement. Fuel consumption also varies with load; for instance, an 800 hp excavator consumes 24-25 gal/h at low load (least strenuous service) and 34-35 gal/h at high load (most strenuous service. According to Edition 30 of the *Caterpillar Performance Handbook* (Caterpillar, Inc., Peoria, IL, October 1999) the spread in hourly consumption rates (that is the ratio of high load consumption to low load consumption) across the spectrum of its equipment for which periods of idling are a factor averages about 1.6 (with high loads representing the lowest percentage of time at idle). Thus, less fuel overall is used by most off-road equipment when the unit spends a larger proportion of time idling. However, for some equipment types, notably scrapers, graders, and backhoes, the fuel use spread can be as small as 1.3. It is not known at this time whether specific measures have been adopted to limit the proportion of low load equipment time spend idling and thus obviate unnecessarily costly running.

Experts in the field have indicated that for heavy off-road equipment users operating on contract the money value of time is much more significant that the money cost of fuel. If this is generally true, then demand for retrofit auxiliary power devices, such as electric control and fuel heating, is likely to be limited unless a strong case can be made for extending a unit's productive life or spreading out its maintenance schedule through application of such devices. Moreover, operators remain leery of shutting down power in cold weather or hostile (e.g., high dust concentration) conditions. But few users have had to confront diesel fuel prices as high as they have become in recent months, with little if any relief in sight. It is therefore possible that the industry's thinking about the benefits of supplementary heaters or APUs could change.

2.5. Marine Vessels

The required power is generally supplied by the vessel's on-board generators, so auxiliary units are not required. Vessel energy needs are not supplied in a manner that wastes large amounts of energy. However, low-grade fuel oil that is high in sulfur (thousands of ppm, compared to 350 ppm for on-road diesel) is burned, leading to concern about both sulfur oxide and particulate emissions. Several alternatives are possible for reducing these emissions. By far the simplest solution would be to burn lower-sulfur fuel. This would represent a relatively small additional expense. Refiners are now making lower-sulfur fuel available to comply with upcoming regulations for highway use, and this could also be used in ships. Sulfur oxide and particulate emissions from vessels would be reduced at sea as well as in port. Emissions of nitrogen oxides and carbon dioxide would be unaffected. However, nitrogen oxide emissions could be reduced by injecting water into the combustion stream to lower the temperature and thus reduce their production. Several demonstration projects are underway in the U.S. and Canada to reduce NO_x emissions from ships.

(Gore, *ibid*)

Another possibility would be for vessels in port to use shore power. If appropriate connections were built, they could simply plug into the local power grid. This practice is known as "cold ironing." The emissions at the port would be eliminated and replaced with those at power plants, which are presumably cleaner. The cost of this option would probably be relatively minor, although cabling and transformers would be required. The Navy uses shore power at some bases, and the Port of Long Beach is considering this option (early 2004). Shore power could also be supplied by fuel cells, as has been proposed in California. The capital cost of this option would be considerable, large enough units are not available, and there is a question about what fuel would be used. Emissions of particulates and oxides of nitrogen and sulfur would be reduced in any case, but if a hydrocarbon were reformed either on-site or remotely to produce the required hydrogen, carbon dioxide would still be emitted. Only if hydrogen were produced from renewable sources or nuclear power would greenhouse gas emissions be reduced.