# Real Time Tailpipe Emission Measurements

Single particle size and composition by chemical ionization mass spectroscopy

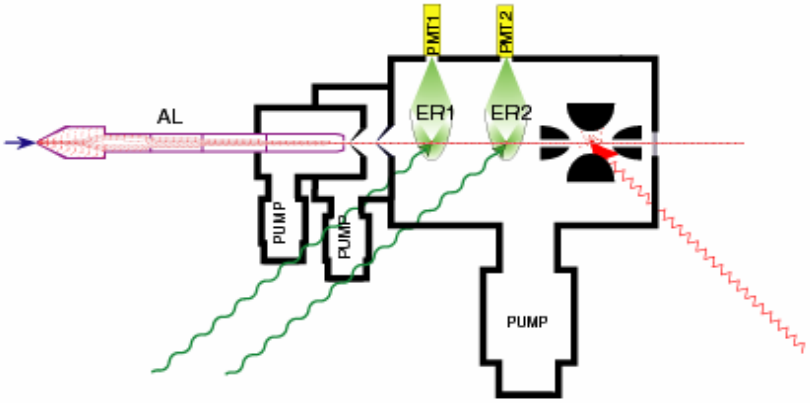


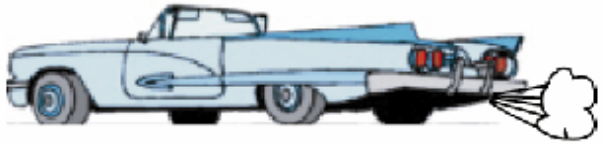

Rapid size distribution from 2.9nm to 1000nm measurements with 2 second time resolution

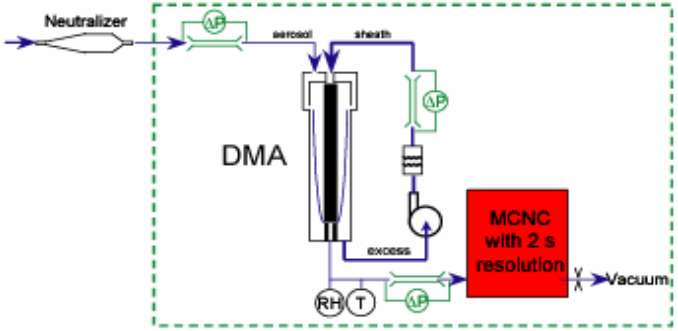



A. Zelenyuk, D. Imre, J. Wegrzyn
BNL

M. Alexander
PNNL

W. Zhu, K. Mueller, P. Imrich
SUNY-SB

# ROAD MAP

**Objective**

**Where we are**

**Steps to get there**

# Objective

Develop and deploy a system capable of providing *size resolved composition* of tailpipe-emitted particulates and their time evolution for assessing health effects and engine performance

# Requirements

- *Real-time*
- *Easy to interpret* format
- Size range from a few nanometers to microns
- Temporal resolution on order seconds

# Approach

**Hardware (RT-SPMS):** Develop a *Real-Time Single Particle Mass Spectrometer* capable of measuring the size and composition of individual particles 20nm to 3μm in diameter, while measuring complete *size distributions* with 2 seconds time resolution.

**Software (SpectraMiner):** Develop the software package for real-time data analysis and an interactive visual interface.

# The Challenge

## The Instrument (RT-SPMS)

- Particle number ***concentrations*** are very ***low***
- Particles are ***small***
- Transient events occur over ***short times***
- Chemical composition is ***complex***
- The road to ***quantitative*** analysis is long and arduous

## Data Analysis and Visualization (SpectraMiner)

- The data are ***complex***
- Data sets are ***large***
- ***Real-time*** data analysis and visualization is the key
- ***User-friendly*** visual interface is a must

# Single Particle Mass Spectrometry: Basics

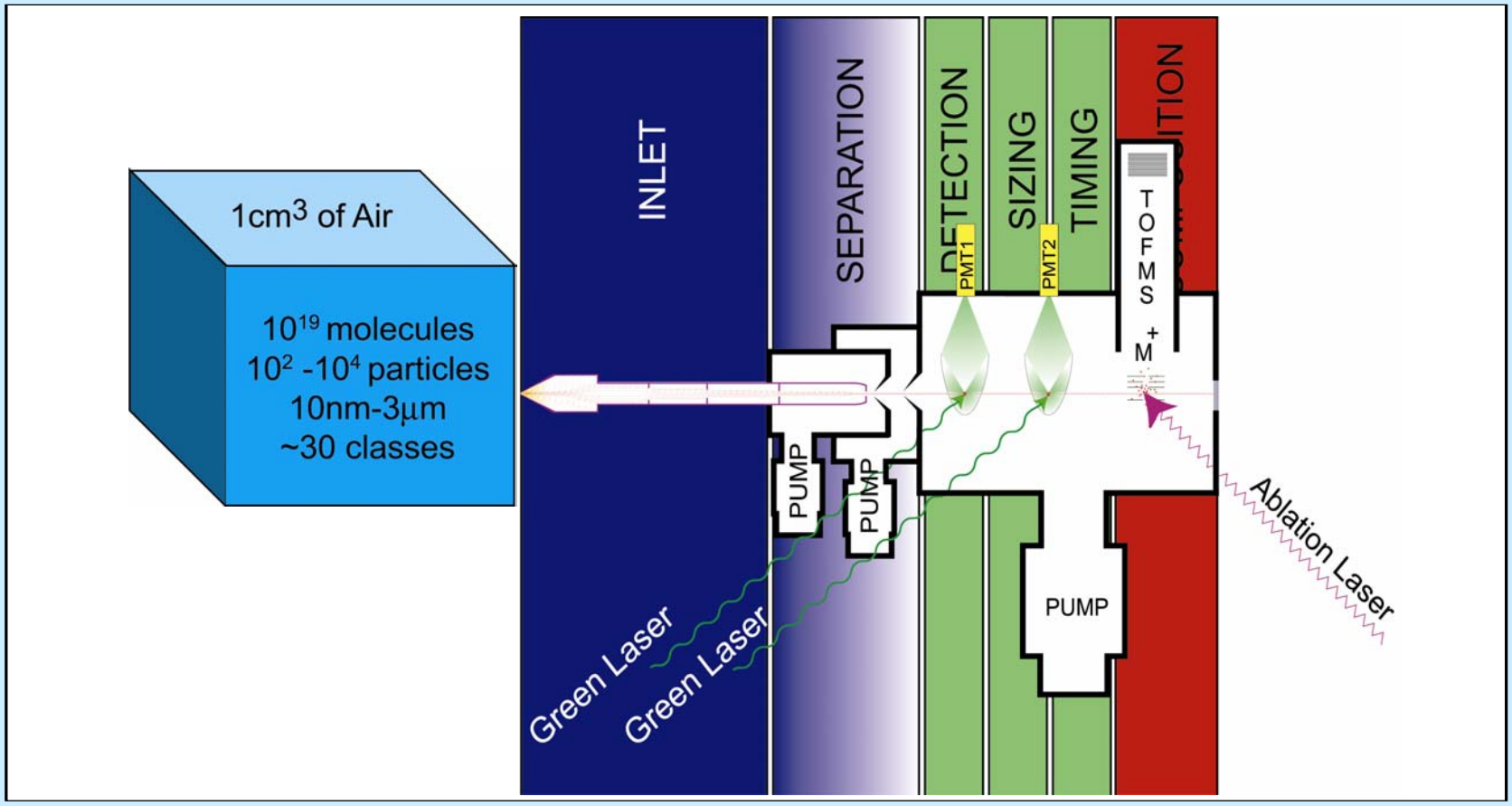

# BNL's Single Particle Laser Ablation Time-of-Flight Mass Spectrometer (SPLAT-MS)

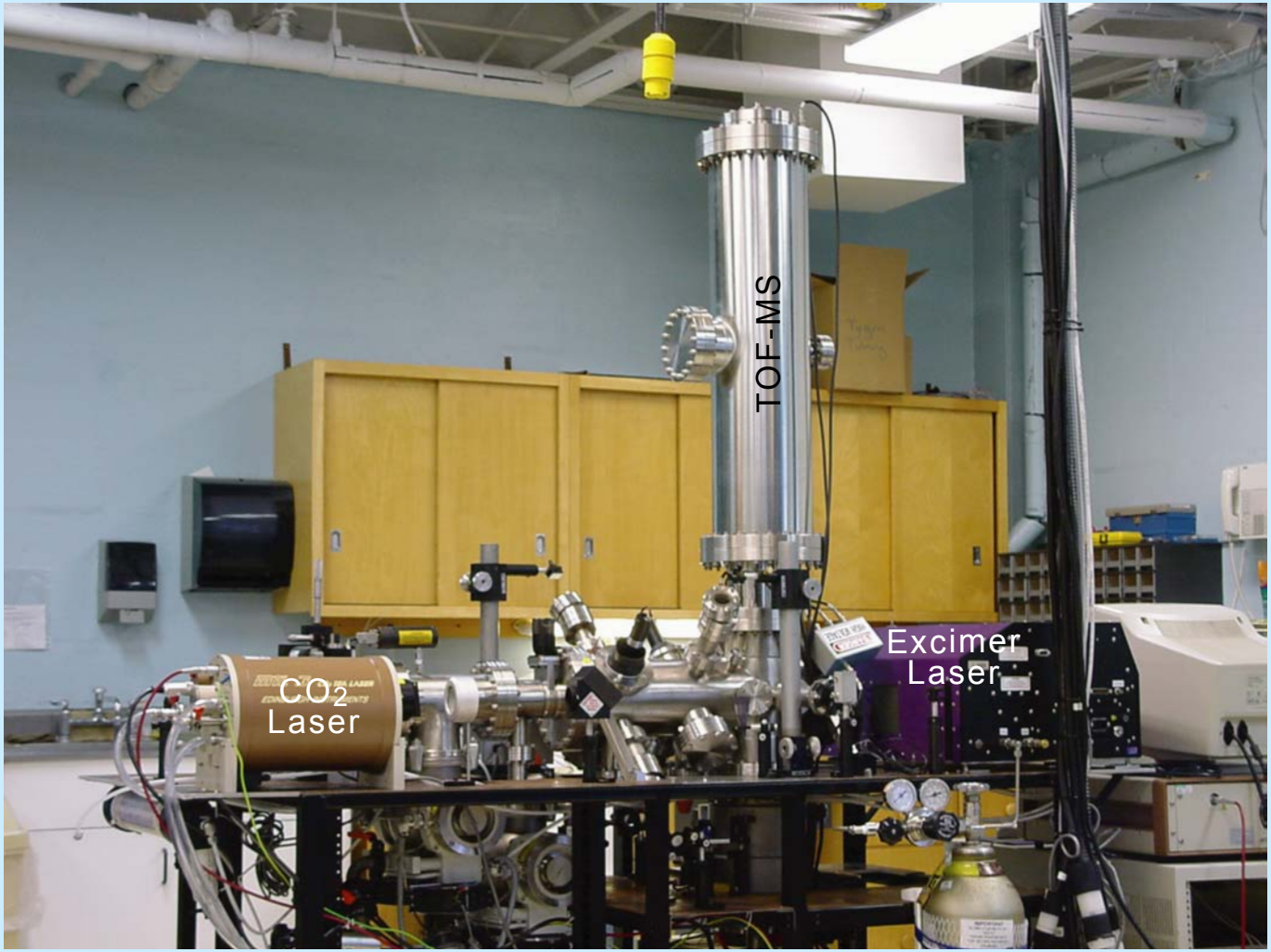

# AERODYNAMIC PARTICLE SIZING

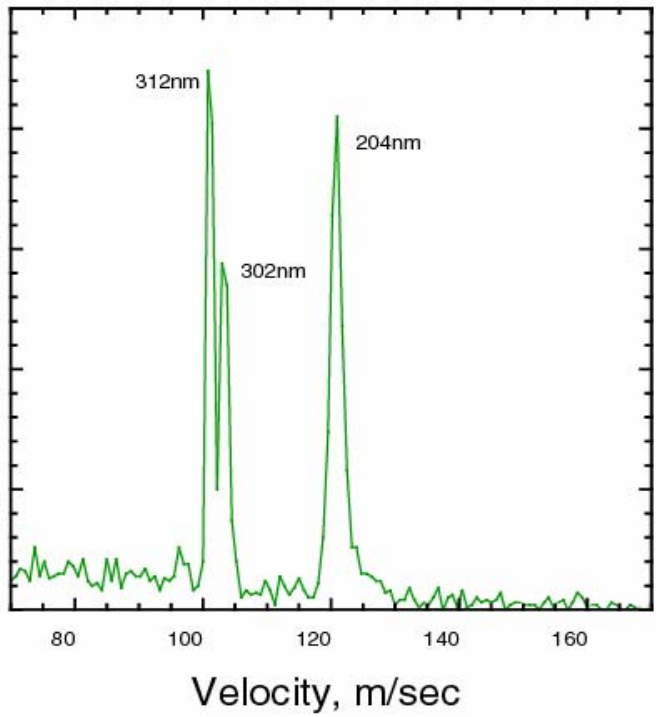


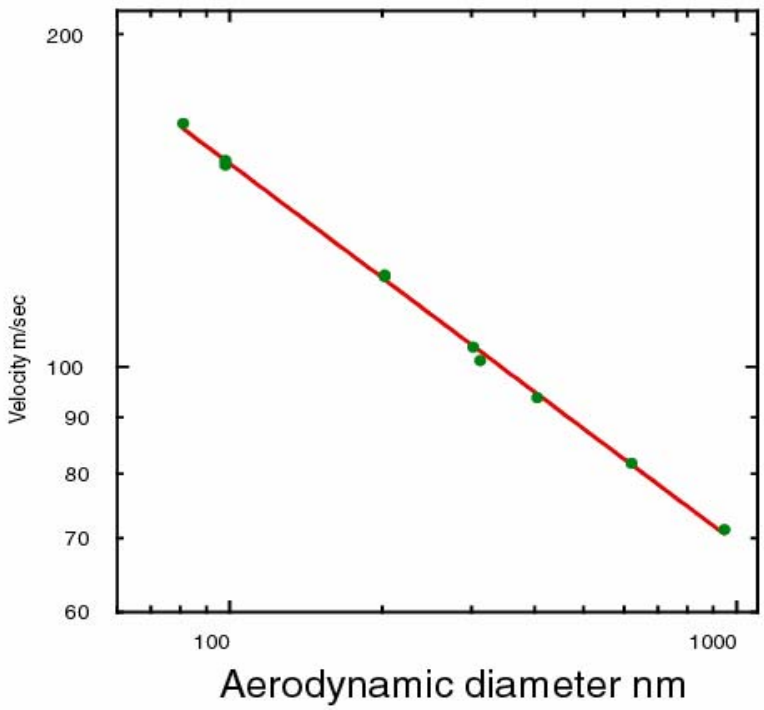

# Aldehyde Particles MS

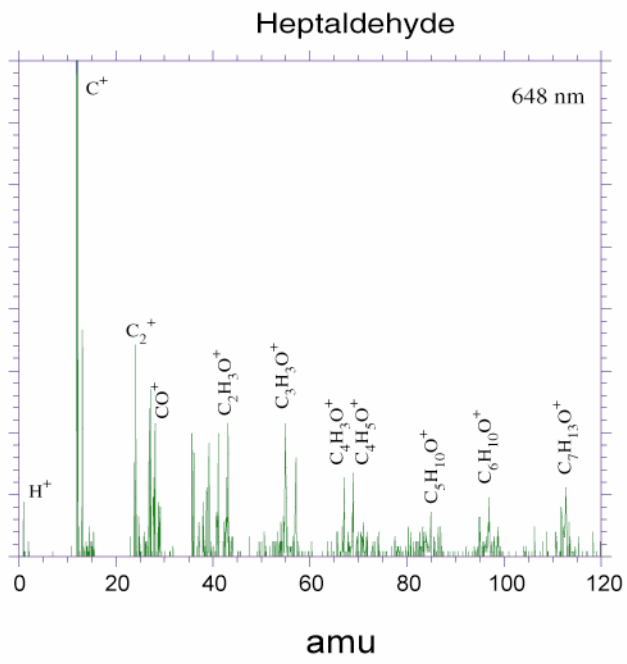


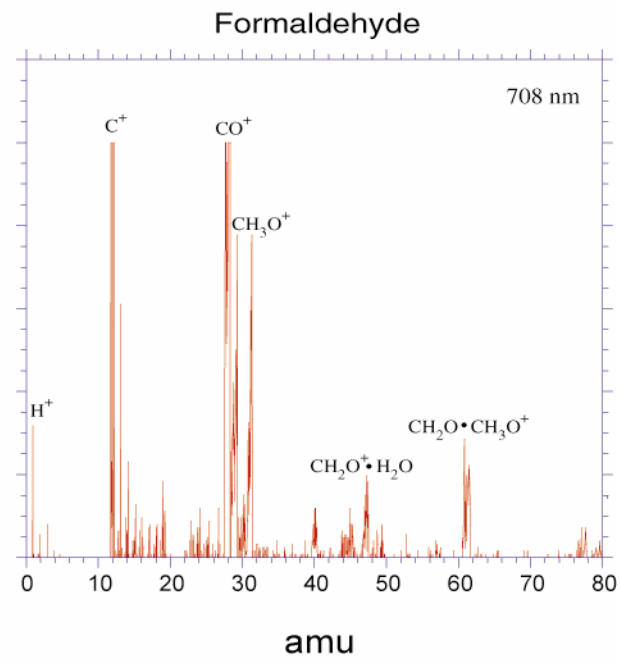

# Field Measurements Houston TX

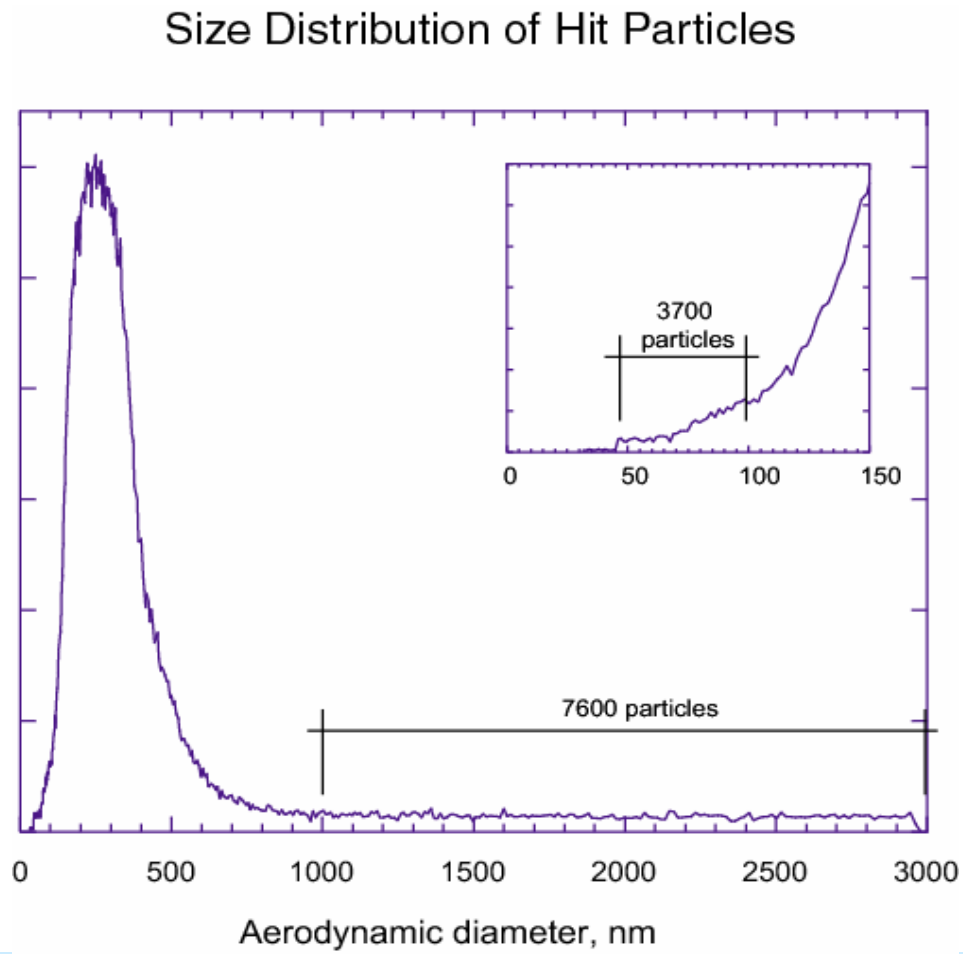

# 4 Little Particles From Houston TX

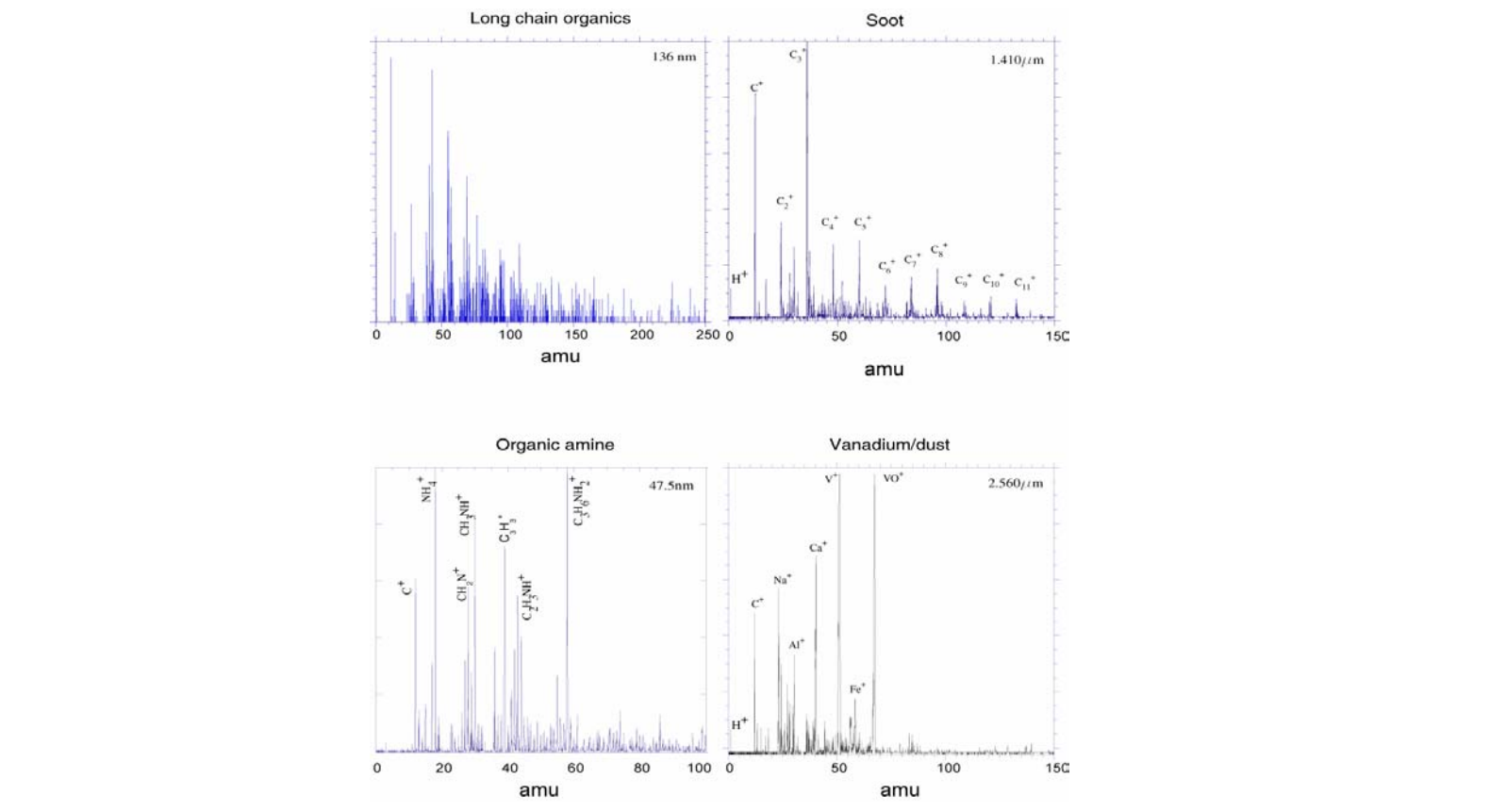

# The Dendogram or Classification Tree

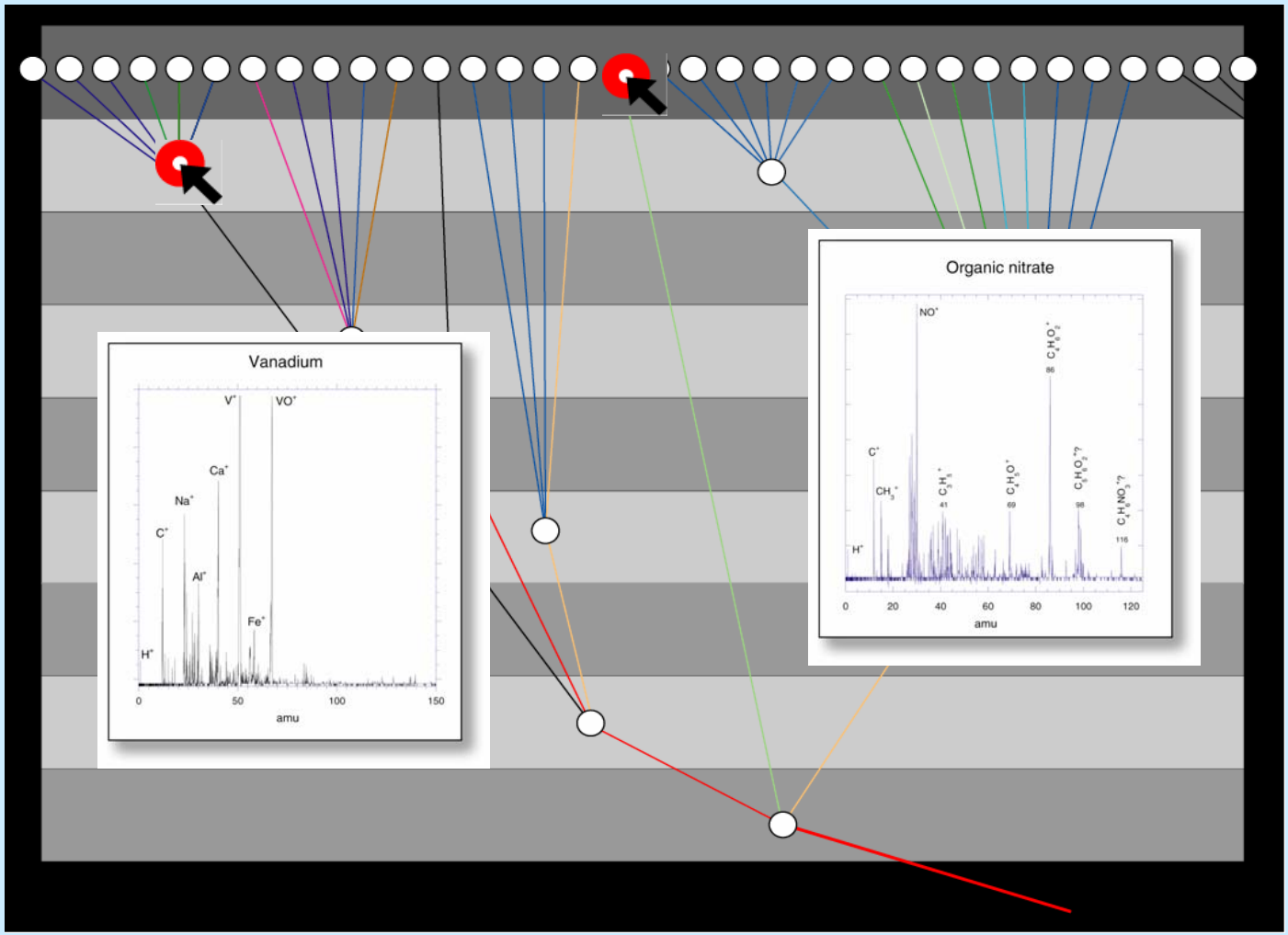

# The Interactive Circular Dendogram
# Representing 233699 Particles From Houston TX

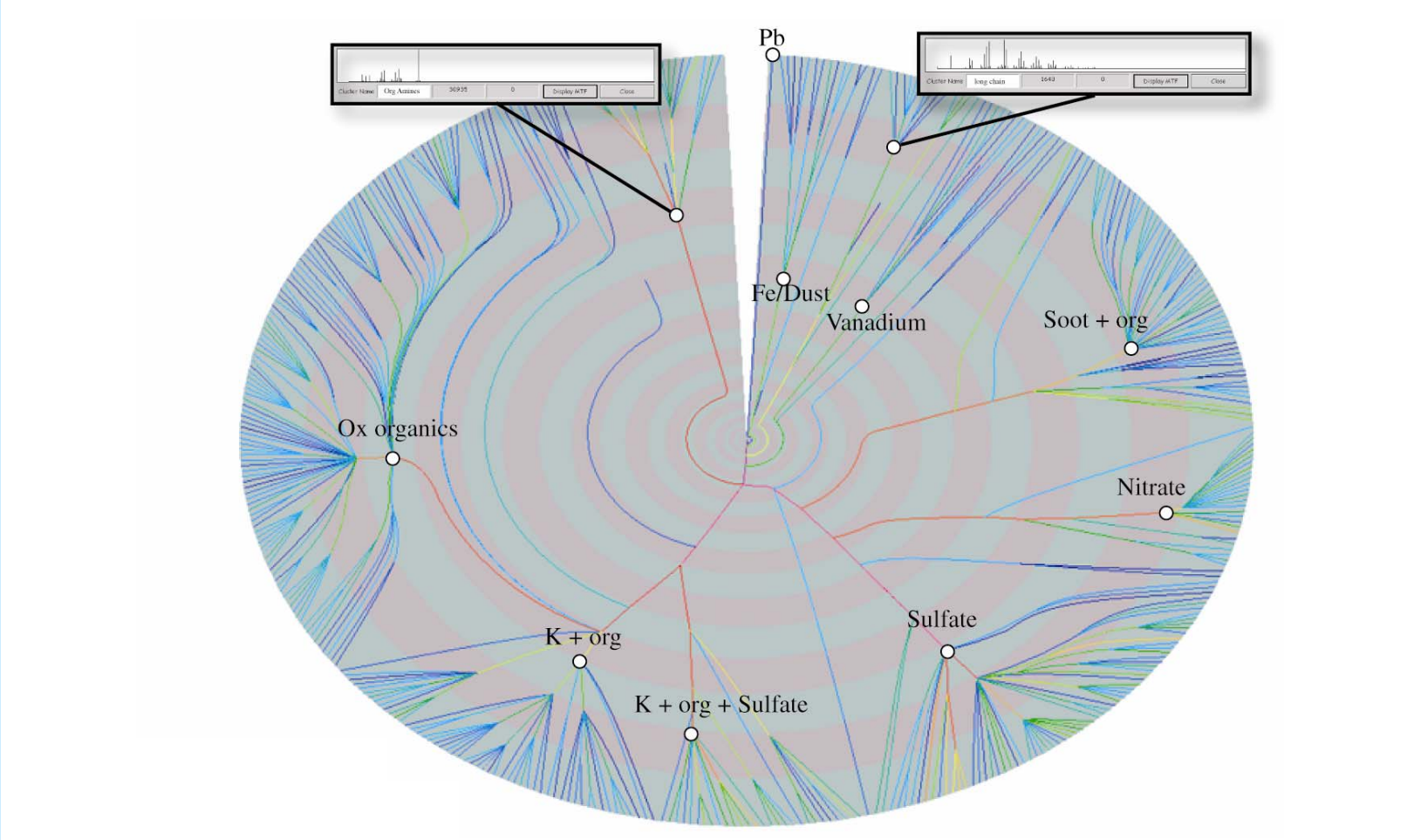

# Application to Exhaust Emissions

## An exploratory study on 5 automobiles

2002 Audi A4

1998 Corvette

An old diesel garbage truck (no emission controls)

1991 Jeep Cherokee

2001 Ford F150 truck running on CNG or on gasoline

# Size Distribution of Hit Particles

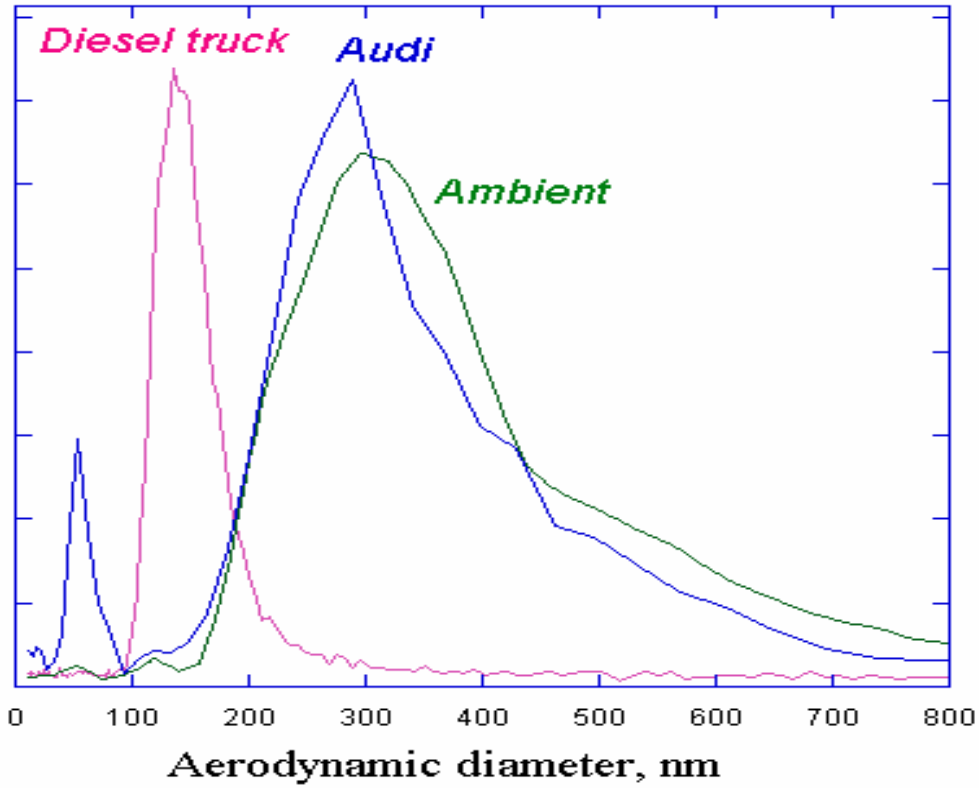

# 4 Little Exhaust Particles

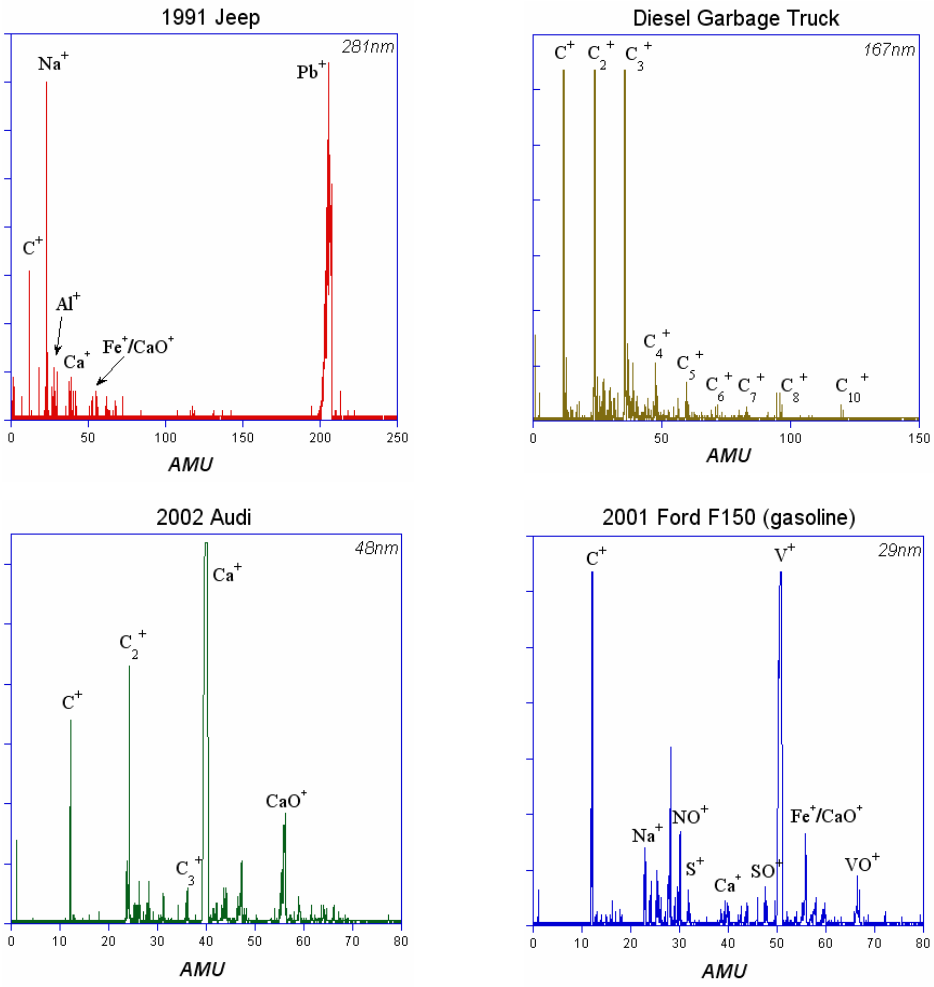

# Lessons

- **The RT-SPMS** has the required sensitivity and temporal resolution
- **SpecraMiner** analyzes and provides a visual display of the data in near real-time with a user friendly interactive interface

# Where Do We Go From Here (easy)

- Improve RT-SPMS ability to characterize small particles by using a UV laser for light scattering and modifying the aerodynamic lens inlet
- Build a smaller ruggedized version of RT-SPMS
- Generate a spectral library
- Upgrade SpecraMiner to perform analysis, which includes particle and gas phase emission information and engine performance parameters, in *true* real-time

# Where Do We Go From Here (hard)

- Turn RT-SPMS into a quantitative tool by producing ions in a two step process of evaporation followed by gas phase ionization

- Make the spectra produced by RT-SPMS easier to interpret by elimination fragmentation through chemical ionization

# TWO STEP ION FORMATION:
# IR EVAPORATION FOLLOWED BY UV IONIZATION

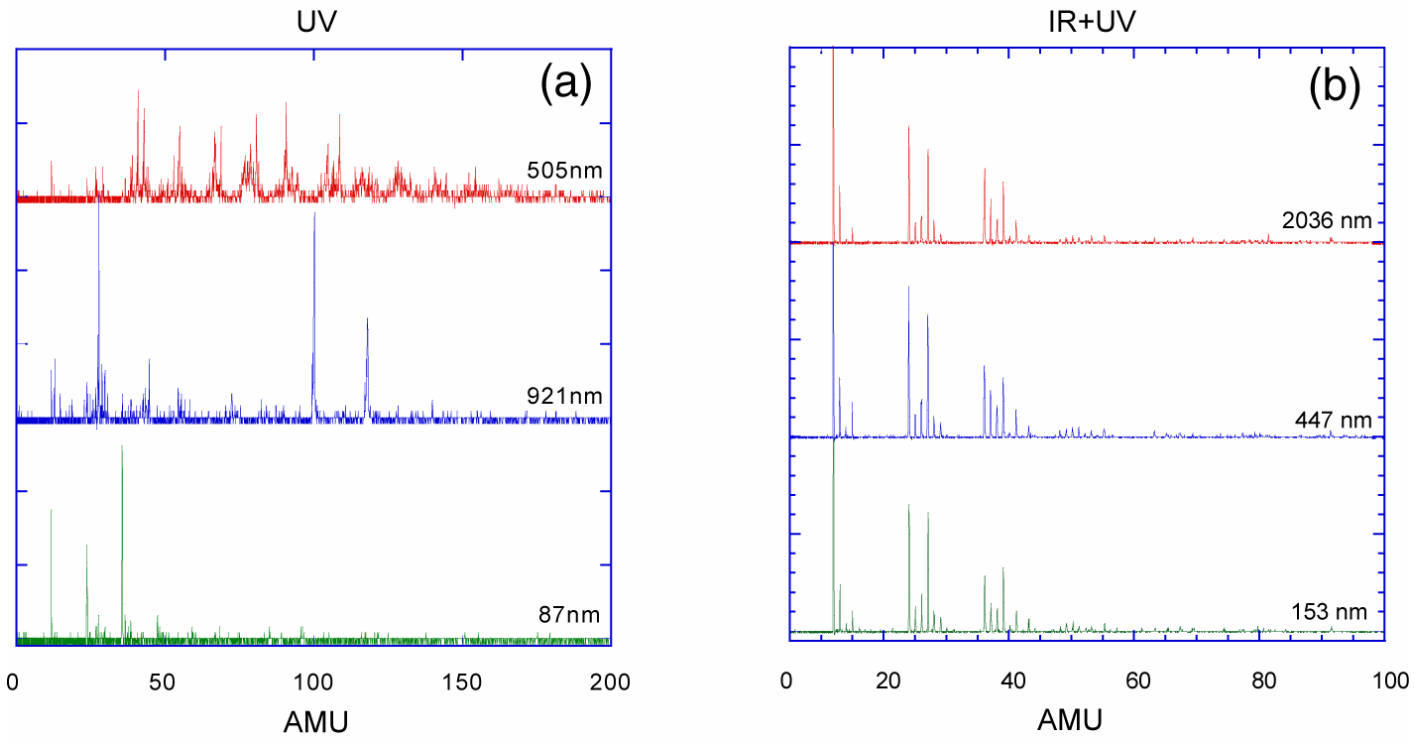

# Beyond IR-UV to Chemical Ionization

- **Proton Transfer Reaction Mass Spectrometry** (PTR-MS) **:** is based on the non-dissociative and very efficient proton transfer reactions of $H_3O^+$ ions with most common organic molecules

$$R + H_3O^+ \rightarrow RH^+ + H_2O$$

- **PTR-MS in Ion Trap:** The RF ion trap mass spectrometer possesses the unique ability to store $H_3O^+$ ions prior to particle arrival to be reacted with the gas plume that is formed by $CO_2$ laser particle evaporation

# PROTON TRANSFER ION TRAP MASS SPECTROSCOPY

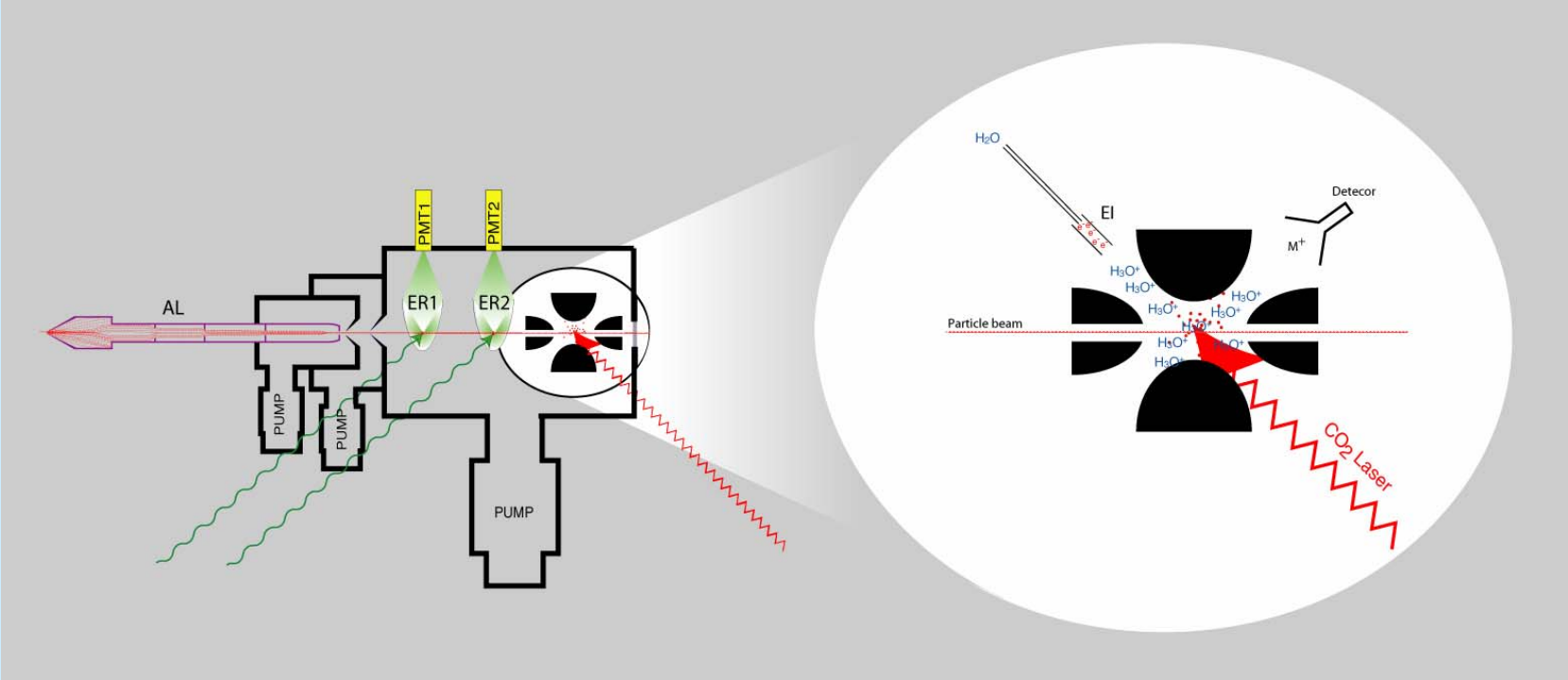


SINGLE PARTICLE $CO_2$ EVAPORATION PROTON TRANSFER REACTION ION TRAP MASS SPECTROSCOPY

# Conclusion

**RT-SPMS, rapid size distribution and SpectraMiner provide:**

- *In-situ* measurement of individual particle size and composition
- Wide size range (from 20nm to 3 microns)
- High temporal resolution of ~50 particle/sec
- Capability to capture and characterize transients
- Analysis of organics by chemical ionization MS
- Characterization of semivolatile
- Simple and analytical quality fringerprinting
- Real-time data visualization and analysis
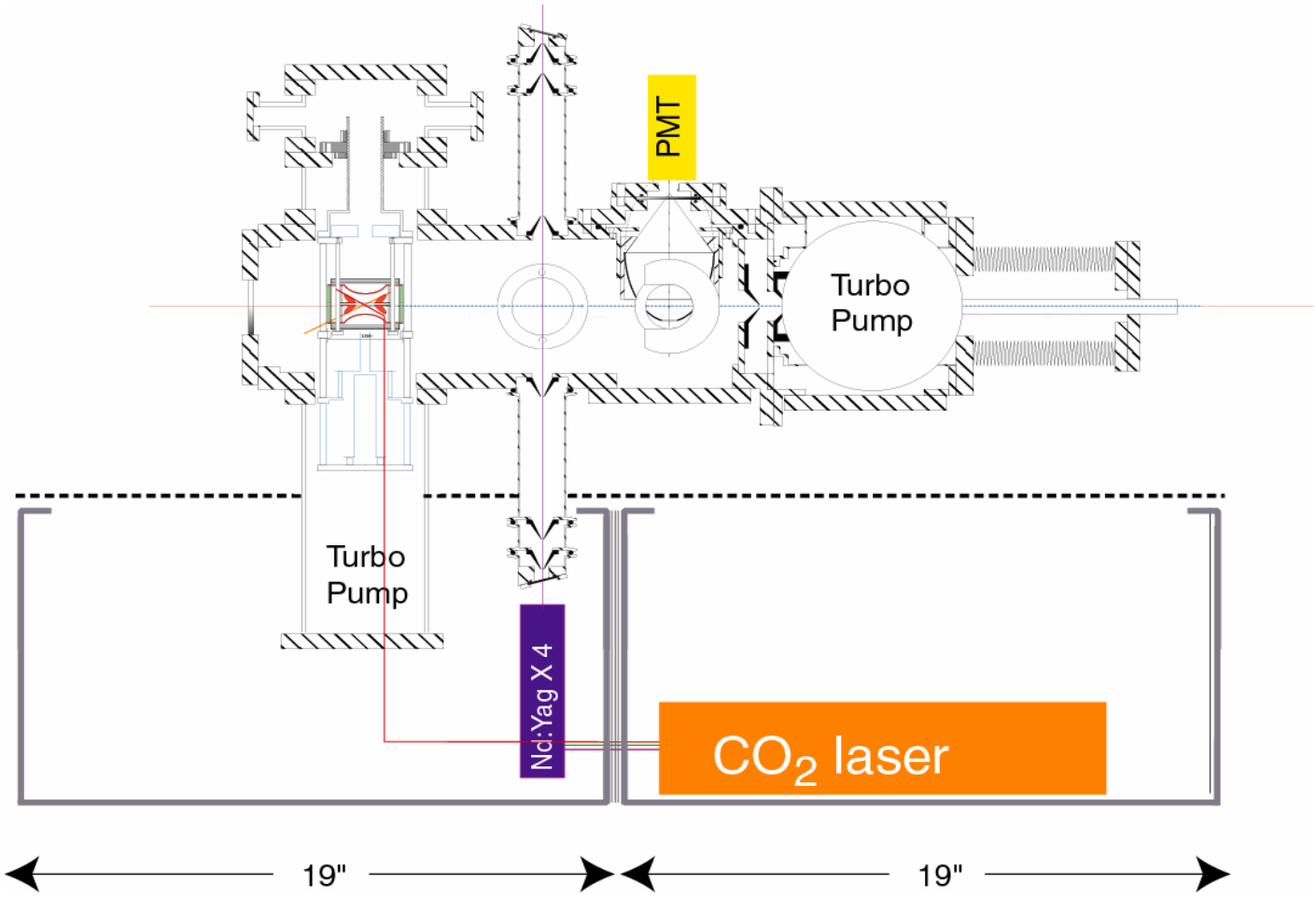
# Compact Field Deployable RT-SPMS